WATERFORD
IRISH STOVES

www.waterfordstoves.com

TARA Direct Vent Freestanding Gas Stove

Owners & Installation Manual

MODELS: T25-NG Natural Gas T25-LP Propane

WARNING:
If the information in these instructions are not followed exactly, a fire or explosion may result causing property damage, personal injury or loss of life.

FOR YOUR SAFETY
Do not store or use gasoline or other flammable vapors and liquids in the vicinity of this or any other appliance.

Installation and service must be performed by a qualified installer, service agency or the gas supplier.

FOR YOUR SAFETY
What to do if you smell gas:

- **Do not try to light any appliance**
- **Do not touch any electrical switch: do not use any phone in your building.**
- **Immediately call your gas supplier from a neighbour's phone. Follow the gas supplier's instructions.**
- **If you cannot reach your gas supplier, call the fire department.**

Tested by:

***Installer*: Please complete the details on the back cover and leave this manual with the homeowner.**
***Homeowner:* Please keep these instructions for future reference.**

CozyCabin.com

FPI FIREPLACE PRODUCTS INTERNATIONAL LTD. 6988 Venture St., Delta, BC Canada, V4G 1H4

01/09/06

WATERFORD
TARA Direct Vent Freestanding Gas Stove

To the New Owner:

Congratulations! You are the owner of a state-of-the-art Waterford Direct Vent Freestanding Gas Stove by Waterford Irish Stoves. The Waterford Gas Series of hand crafted appliances has been designed to provide you with all the warmth and charm of a woodstove, at the flick of a switch. The TARA has been approved by Warnock Hersey for both safety and efficiency. As it also bears our own mark, it promises to provide you with economy, comfort and security for many trouble free years to follow. Please take a moment now to acquaint yourself with these instructions and the many features of your TARA Direct Vent Freestanding Gas Stove.

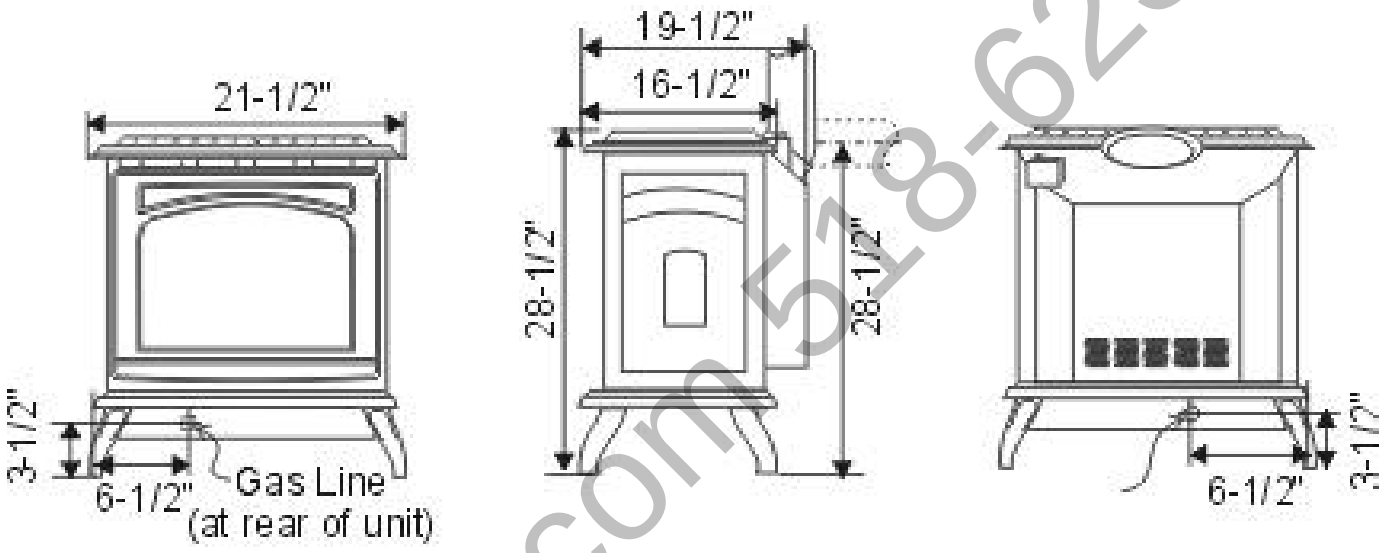

Tara Dimensions

Minor imperfections such as blisters, seeds or thin flaws visible in this product are not defects. These are inherent in the hand-crafted enamel process and cannot be avoided, and they substantiate that this is genuine porcelain enamel.

NATIONAL FIREPLACE INSTITUTE NFI CERTIFIED www.nficertified.org

We recommend that our products be installed and serviced by professionals who are certified in the U.S. by the National Fireplace Institute® (NFI) or in Canada by Wood Energy Technical Training (WETT).

Wood Energy Technical Training

CozyCabin.com 518-623-4349

TABLE OF CONTENTS

Page

Safety Label

Safety Labels 4

Installation

Information for Mobile/Manufactured Home After First Sale 5
Before You Start 5
Manufactured Mobile Home Requirements 6
General Safety Information 6
Installation Checklist 6
Clearances to Combustibles 6
Locating Your TARA Gas Stove 7
Optional Fan Installation 7
Venting Introduction 9
Installation Precautions 9
Safety Precautions for the Installer 9
Combustion and Ventilation Air 9
Exterior Vent Terminal Locations 10
Minimum Horizontal Termination 11
Vertical Termination with Co-Linear Flex System 13
DV Stove Horizontal Vent Kit and Installation 14
Dura-Vent Termination Kits 15
Minimum Dura-Vent Components - Horizontal Installation 16
Minimum Dura-Vent Components - Vertical Termination 16
Rigid Pipe Venting Components List 17
Rigid Pipe Venting
- Dura-Vent Horizontal Installation 18
- Dura-Vent Vertical Termination Installation 18
Vent Restrictor 19
Dura-Vent Horizontal Installation 19
Dura-Vent Vertical Installation 20
Offset Chart 21
Cathedral Ceiling Installations 21
Support Extension - Round or Square 21
Converting a Class-A Metal Chimney or Masonry Chimney to a Direct Vent System 21

Page

Converting a Factory Built Metal Chimney 22
High Elevation 23
System Data Chart 24
Gas Connection 24
Gas Pipe Pressure Testing 24
Valve Description 24
Valve Conversion to Propane 24
Aeration Adjustment 26
Removing Cast Iron Front Panel 26
Optional Front Grill 26
Optional Side Shelf 27
Log Installation 27
Optional Wall Thermostat 27
Optional Remote Control Installation 28
Final Check 28
Wiring Diagram 28

Operating Instructions

Operating Instructions 29
Lighting Procedure 29
Shutdown Procedure 29
First Fire 29
Convection Fan Operation 29
Adjusting Flame Height 29
Copy of Lighting Plate Instructions 30
Normal Operating Sounds of Gas Appliances 30

Maintenance

Maintenance Instructions 31
General Vent Maintenance 31
Log Replacement 31
Glass Replacement 32
Fan Maintenance 32
Valve Maintenance 32
Replacement Parts List 33

Warranty

Warranty 35

Cozycabin.com 518-623-4349

SAFETY LABEL

This is a copy of the label that accompanies each TARA Direct Vent Freestanding Gas Stove. We have printed a copy of the contents here for your review. The safety label is located on the inside of the drop down pedestal door.

NOTE: Waterford units are constantly being improved. Check the label on the unit and if there is a difference, the label on the unit is the correct one.

Copy of Safety Label for TARA T25 Gas Stove

DUPLICATE SERIAL NO. 217

Listed: GAS FIRED DIRECT VENT ROOM HEATER
Certified for/Certifiée pour: CANADA
Tested to: CAN/CGA 2.17-M91,
ANSI Z21.88b-2003/CSA 2.33b-2003

WATERFORD

DO NOT REMOVE OR COVER THIS LABEL / NE PAS ENLEVER CETTE ÉTIQUETTE

217

Report No. J98000895-231 (Mar. 1998) 476-1751-00 (Feb. 2000)

Serial No./ No de serie

Model/Modele: T25-NG

Model: Tara	T25-NG NATURAL GAS	T25-LP PROPANE
Minimum inlet pressure	5" WC/C.E. (1.24 kPa)	12.0" WC/C.E. (3.0 kPa)
Manifold pressure	3.8" WC/C.E. (0.94 kPa)	11.0" WC/C.E. (2.70 kPa)
Orifice size	#41 DMS	#53 DMS
Maximum Output	18,875 Btu/h (5.53 Kw/h)	19,250 Btu/h (5.64 Kw/h)
Altitude	0-4500 ft/pi (0-1370m)	0-4500 ft/pi (0-1370m)
Maximum Input	25,000 Btu/h (7.3 Kw/h)	25,000 Btu/h (7.3 Kw/h)
Minimum Input	15,000 Btu/h (4.39 Kw/h)	13,000 Btu/h (3.80 Kw/h)

Minimum Clearances to Combustibles/Degagement
Minimum De Materiaux Combustibles

Unit to Sidewalls	6"/150mm
Unit Corner to walls	2"/ 50mm
Unit to Backwall	3"/ 75mm
Maximum Alcove Depth	24"/610mm
Unit to Alcove Ceiling	13"/330mm

Model/Modele: T25-LP

The Tara T25 Direct Vent Gas Stove is approved for use with the Simpson DuraVent Venting Components listed in the installation instructions.

Minimum Horizontal Vent Length: 6 in. with Riser Vent (Part #:640-944)

Maximum Horizontal Vent Length: 6 ft. (with 2 ft. Vertical) or 12 ft. (with 3 ft. Vertical)

See Installation Instructions.

This appliance must be properly connected to a venting system in accordance with manufacturer's installation instructions. If removed, follow installation instructions for proper reassembly and/or resealing.

Cet appareil doit être correctement raccordé au un systeme d'évacuation, en accord avec les instructions du manufaturier. Si désconnecté suivre les instructions d'installations pour réinstaller et sceller correctement.

Not for use with solid fuel.
Ne doit pas être utilise avec un combustible solide.

For use with natural gas and propane. A conversion kit as supplied by the manufacturer, shall be used to convert this room heater to the alternate fuel.

Pour utilisation avec le gaz naturel et le propane. Une trousse de conversion fournie par le fabricant doit être utilisée pour passer d'un combustible à l'autre.

CAUTION: Do not operate with glass panel removed, cracked or broken. Replacement of glass panel should be done by a licensed or qualified service person. Use only glass assemblies certified for use with this appliance.

ATTENTION: Ne pas utiliser l'unité si le panneau vitré est manquant, craque ou brise. Veillez à ne jamais installer ni utiliser quelque composante que ce soit non spécifiée pour usage avec cet appareil. Ne remplacez la vitre qu'avec du verre de céramique de Waterford.

WARNING: Improper installation, adjustment, alteration, service or maintenance can cause property damage, personal injury, or loss of life. Refer to the owner's information manual provided with this appliance. Installation and service must be performed by qualified installer, service agency or the gas supplier.

AVERTISSEMENT: Installation, modification de réglage, entretien et dépannage non appropriés risquent de causer des dommages matériels, des accidents ou des blessures corporels. Veuillez vous référer au manuel du propriétaire fourni avec cet appareil. Pour toute assistance ou information supplémentaire, veuillez consulter un installateur ou un organisme de dépannage autorisés ou votre compagnigaziére.

This appliance must be installed in accordance with local codes, if any; if not, follow the current ANSI Z223.1 or CAN 1-B149.

Ce radiateur doit être installé conformement aux exigences des codes locaux. S'il n'existe aucun code local, se conformer à la norme CAN 1-B149 en vigueur.

Due to high surface temperatures, keep keep children, clothing furniture, gasoline, or liquids with flammable vapors away.

A cause de le température élevée des parois, tenir éloignés les enfants, les vêtements et les meubles.

Also for use in mobile (manufactured) homes after first sale of home. Mobile (Mfg.) home installations must adhere to Title 24 CFR, part 3280, or CSA Z240.4

Part no. 45000 fan or blower assembly may be used.
Piéce no. 45000 Unite de type ventilateur ou souffleur peut être utilisée.

Electrical Rating: 120 Volts 60 Hz 1.2 Ampere

FPI Fireplace Products International Ltd., Delta, BC, Canada

Made in Canada/ Fabrique au Canada 908-789a

For the State of Massachusetts, installation and repair must be done by a plumber or gasfitter licensed in the Commonwealth of Massachusetts.

For the State of Massachusetts, flexible connectors shall not exceed 36 inches in length.

For the State of Massachusetts, the appliances individual manual shut-off must be a t-handle type valve.

Cozy Cabin.com 5-8-623-4349

IMPORTANT: SAVE THESE INSTRUCTIONS

The TARA Direct Vent Freestanding Gas Stove must be installed in accordance with these instructions. Carefully read all the instructions in this manual first. Consult the building authority having jurisdiction to determine the need for a permit prior to starting the installation.

Note: Failure to follow the instructions could cause a malfunction of the heater which could result in death, serious bodily injury, and/or property damage. Failure to follow these instructions may also void your fire insurance and/or warranty.

Note: These instructions take precedence over Simpson Dura-Vent instructions.

SPECIFICATIONS

Fuels: The TARA is factory equipped for use with natural gas. A Propane Conversion Kit (#290-969) is available to convert the TARA for use with liquefied petroleum gases (propane).

Electrical: 120V A.C. system.

Circulation Fan: Variable speed, 125/75 (Optional)

Log Sets: Ceramic fibre, 5 per set.

Vent System: Coaxial (6-5/8" outer / 4" inner liner) rigid flue and termination cap.

The efficiency rating of the appliance is a product thermal efficiency rating determined under continuous operating conditions and was determined independent of any installed system.

INFORMATION FOR MOBILE/ MANUFACTURED HOMES AFTER FIRST SALE

This Waterford product has been tested and listed by Warnock Hersey as a Direct Vent Wall Furnace to the following standards: UL 307B-1995, CAN/CGA-2.17-M91 and ANSI Z21.88b-2003/CSA 2.33b-2003.

This Direct Vent System Appliance must be installed in accordance with the manufacturer's installation instructions and the Manufactured Home Construction and Safety Standard, Title 24 CFR, Part 3280, or the current Standard of Fire Safety Criteria for Manufactured Home Installations, Sites, and Communities ANSI/ NFPA 501A, and with CAN/CSA Z240-MH Mobile Home Standard in Canada.

This appliance installation must comply with the manufacturer's installation instructions and local codes, if any. In the absence of local codes follow the current National Fuel Gas Code, ANSI Z223.1 and the current National Electrical Code ANSI/NFPA 70 in the U.S.A., and the current CAN/CGA B149 Gas Installation Code and the current Canadian Electrical Code CSA C22.1 in Canada.

This Waterford Mobile/Manufactured Home Listed appliance comes factory equipped with a means to secure the unit.

This Waterford Mobile/Manufactured Home listed appliance comes equipped with a dedicated #8 ground lug to which an 18 gauge copper wire from the steel chassis ground must be attached.

This appliance may only be installed in an aftermarket permanently located, manufactured (mobile) home, where not prohibited by local codes.

This appliance is only to be used with the type of gas indicated on the rating plate. This appliance is not convertible for use with other gases, unless a certified kit is used.

BEFORE YOU START

Safe installation and operation of this appliance requires common sense, however, we are required by the Canadian Safety Standards and ANSI Standards to make you aware of the following:

INSTALLATION AND REPAIRS SHOULD BE DONE BY A QUALIFIED SERVICE PERSON. THIS APPLIANCE SHOULD BE INSTALLED, REPAIRED, INSPECTED BEFORE USE AND AT LEAST ANNUALLY BY A QUALIFIED SERVICE PERSON. MORE FREQUENT CLEANING MAY BE REQUIRED DUE TO EXCESSIVE LINT FROM CARPETING, ETC. IT IS IMPERATIVE THAT THE CONTROL COMPARTMENT, BURNERS AND CIRCULATING AIR PASSAGEWAYS OF THE APPLIANCE BE KEPT CLEAN.

DUE TO HIGH TEMPERATURES, THE APPLIANCE SHOULD BE LOCATED OUT OF TRAFFIC AND AWAY FROM FURNITURE AND DRAPERIES.

WARNING: FAILURE TO INSTALL THIS APPLIANCE CORRECTLY WILL VOID YOUR WARRANTY AND MAY CAUSE A SERIOUS HOUSE FIRE.

CHILDREN AND ADULTS SHOULD BE ALERTED TO THE HAZARDS OF HIGH SURFACE TEMPERATURES, ESPECIALLY THE FIREPLACE GLASS, AND SHOULD STAY AWAY TO AVOID BURNS OR CLOTHING IGNITION.

YOUNG CHILDREN SHOULD BE CAREFULLY SUPERVISED WHEN THEY ARE IN THE SAME ROOM AS THE APPLIANCE.

CLOTHING OR OTHER FLAMMABLE MATERIAL SHOULD NOT BE PLACED ON OR NEAR THE APPLIANCE.

1) Provide adequate clearances for servicing, proper operation and around the air openings into the combustion chamber.

2) The appliance must be installed on a flat, solid, continuous surface (e.g. wood, metal, concrete). This may be the floor, or it can be raised up on a platform to enhance its visual impact. The appliance may be installed on carpeting, tile, wood flooring or other combustible material. The TARA Direct Vent Freestanding Gas Stove can be installed in a wide variety of ways and will fit nearly any room layout. It may be installed in a recessed position, framed out into the room, or across a corner.

3) The TARA Direct Vent Freestanding Gas Stove is approved for alcove installations, which meet the clearances listed on page 6. This unit is approved for manufactured home installations, see page 6 and pages 9 to 17 for the required vent arrangements. If installed into a manufactured home the unit must be bolted down to the floor.

4) This appliance is Listed for bedroom installations when used with a Listed Millivolt

Cozy Cabin.com 519-623-4349

Thermostat. Some areas may have further requirements, check local codes before installation.

5) This appliance is Listed for Alcove installations, maintain minimum Alcove clearances as follows, minimum width of 33-1/2" (851mm), a maximum depth of 24" (610mm), and minimum ceiling height of 41-1/2" (1054mm).

6) We recommend that you plan your installation on paper using exact measurements for clearances and floor protection before actually installing this appliance. Have a qualified building inspector review your plans before installation.

MANUFACTURED MOBILE HOME ADDITIONAL REQUIREMENTS

1) Ensure that structural members are not cut or weakened during installation.

2) Ensure proper grounding using the #8 ground lug provided.

3) Appliance must be anchored to the floor with the supplied anchoring methods.

GENERAL SAFETY INFORMATION

1) The appliance installation must conform with local Canadian Electrical Code.

2) The appliance when installed, must be electrically grounded in accordance with local codes, or in the absence of local codes with the current National Electrical Code, ANSI/NFPA 70 or CSA C22.1 Canadian Electrical Code.

3) The appliance should be inspected for shipping damage before use and **serviced annually by a professional service person**. More frequent cleaning may be required due to excessive lint from carpeting, bedding material, etc. It is imperative that control compartments, and circulating air passageways of the appliance be kept clean and free from excessive lint from carpeting.

4) See general construction and assembly instructions. The appliance and vent should be enclosed when installed in or passing through a living area, where children may come in contact with it.

5) This appliance must be connected to the specified vent and termination cap to the outside of the building envelope. Never vent to another room or inside a building. Make sure that the vent is fitted as per the instructions starting on page 9.

6) Inspect the venting system annually for blockage and any signs of deterioration.

7) Venting terminals shall not be recessed into a wall or siding.

8) Any safety glass removed for servicing must be replaced prior to operating the appliance.

9) To prevent injury, do not allow anyone who is unfamiliar with the operation to use the fireplace.

Emissions from burning wood or gas could contain chemicals known to the State of California to cause cancer, birth defects or other reproductive harm.

INSTALLATION CHECKLIST

1) Check Clearances to Combustibles (page 6), location of unit (page 7) and venting requirements (pages 9-20).

2) a) Carefully unpack the unit from the packaging.

EXTREME CARE NEEDS TO BE TAKEN WHEN HANDLING PORCELAIN ENAMEL PARTS OR CERAMIC LOGS TO AVOID DAMAGE. DAMAGE TO THESE PARTS IS NOT COVERED UNDER WARRANTY.

b) Use a 7/16" wrench to remove the two lag bolts used to secure the stove to the pallet.

c) Locate the 4 leg levelling bolts supplied with the stove. Fit these bolts to the underside of the legs as shown. These levelling bolts can be used to level the stove on an uneven surface.

3) Install Optional Fan, see page 7.

4) Install venting: Check all venting requirements, pages 9 to 20. Minimum Horizontal Vent Kit, page 11, Vertical Termination Co-Linear Flex System, page 13, DV Stove Horizontal Vent Kit (page 14), and the Dura-Vent Termination Kits, page 15. Converting a Class-A Metal Chimney or Masonry Chimney to a Direct Vent System, page 21.

5) Make gas connections, page 24. Test the pilot. Must be as per diagram, page 26.

6) Test Gas Pressure, page 24.

7) Install logs where indicated on page 27.

8) Install Optional Side Shelves, page 27.

9) Install optional Remote Control, or Wall Thermostat, pages 27 and 28.

10) Final check, page 28.

Before leaving this unit with the customer, the installer must ensure that the appliance is firing correctly and **operation fully explained to customer**.

This includes:

1) Clocking the appliance to ensure the correct firing rate (rate noted on label), first burning the appliance for 15 minutes.

2) If required, adjusting the primary air to ensure that the flame does not carbon. First allow the unit to burn for 15-20 min. to stabilize.

CAUTION: Any alteration to the product that causes sooting or carboning that results in damage is not the responsibility of the manufacturer and is not a warranty issue.

CLEARANCES TO COMBUSTIBLES

The clearances listed are MINIMUM distances. Measure the clearance to both the appliance and the chimney connector. **The farthest distance is correct if the two clearances do not coincide.**

For example, if the appliance is set as indicated in one of the figures but the connector is too close, move the stove until the correct clearance to the connector is obtained.

This appliance may be installed only with the clearances as shown in the situations pictured. **Do not combine clearances from one type of installation with another in order to achieve closer clearances.**

This unit can be installed on a solid combustible surface like a wood floor. This unit can also be installed directly on carpeting or vinyl.

CozyCabin.com 518-623-4349

Use the minimum clearances shown in the diagrams below:

TARA Clearances

Side Wall to Unit*	A	6"	/ 150 mm
Back Wall to Unit	B	3"	/ 75 mm
Unit Corner to Wall	C	2"	/ 50 mm
Unit to Alcove Ceiling		13"	/ 330 mm
Max. Alcove Depth		24"	/ 610 mm

*If installing the side shelves, which are 6" wide, additional space is required.

Minimum ceiling height is 47"/1294mm from floor.

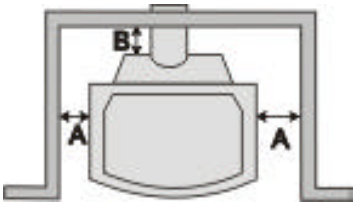

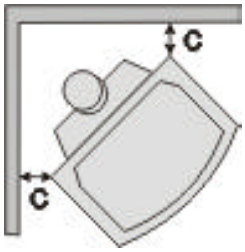

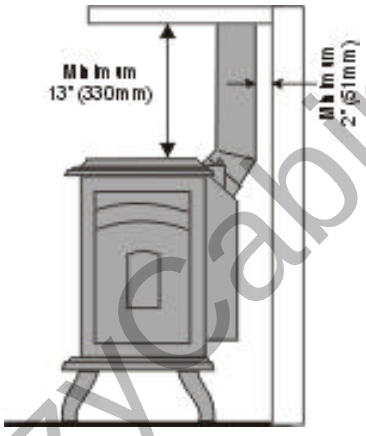

LOCATING YOUR GAS STOVE

When selecting a location for your stove, ensure that the clearances listed above are met as well as ensuring that there is adequate accessibility for servicing and proper operation.

For Vent Termination requirements, see page 10.

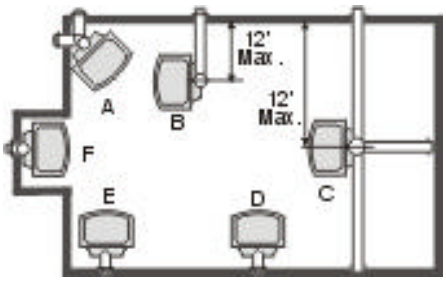

A) Cross Corner
B) Room Divider
C) Island
D) Flat on Wall
E) Flat on Wall Corner
F) Flush with Wall/Alcove

OPTIONAL FAN INSTALLATION

for units starting with serial # 11106 to 13347 / 217000001 to present.

Fan Kit Contains:

Qty. Description
1 Fan Assembly c/w green wire attached
1 Thermodisc
1 power cord
2 2-1/4" x 20 hex nut

1) Remove the thermodisc from the bracket on the fan assembly, do not disconnect the wires.

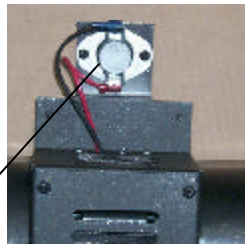

Thermodisc

2) Remove the rear access panel on the back of the stove by removing the 6 screws. Take care not to cut wires when lowering the panel.

Rear Access Panel secured with 6 screws (3 on each side)

3) Remove the Top Control Panel Assembly by removing the three screws.

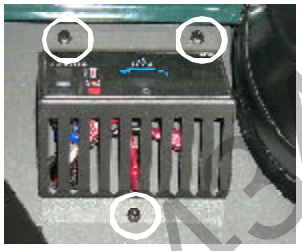

Top Control Panel Assembly

4) Remove the nylon hole plug from the control panel.

5) Install the fan speed controller onto the control panel and secure with nut and washer. Connect the red and black wires from the wire harness to speed controller. NOTE: Speed control wires must be in the down position when control panel is in place.

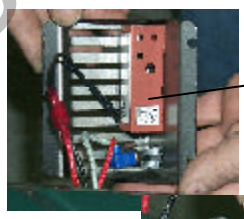

Fan Speed Controller

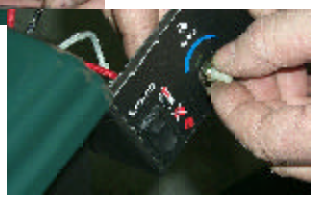

6) Push black knob onto speed control.

7) Re-attach control panel with 3 screws, reversing step 2.

8) Mount the blower assembly in position under the base of the stove and secure with the 2 supplied bolts (2-1/4" #20 hex head)

CozyCabin.com 518-623-4549

9) Connect the red wire from the thermodisc to the red wire of the speed control wire harness.

10) Connect the live black wire from power cord to the black wire of the speed control wire harness.

NOTE: Pull excess wire next to fan to avoid excessive heat from the firebox.

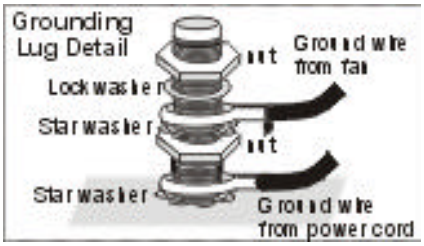

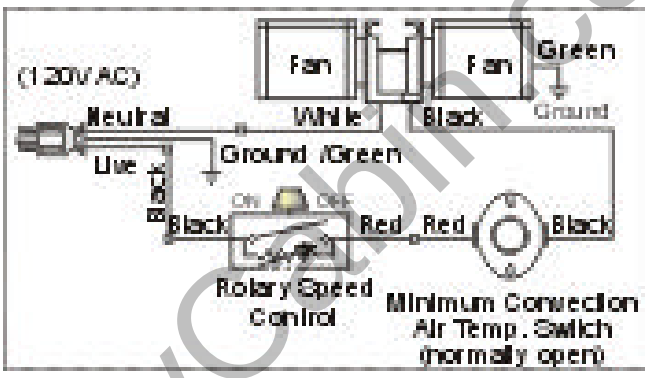

11) Slide the thermodisc into the bracket clip on the underside of the firebox.

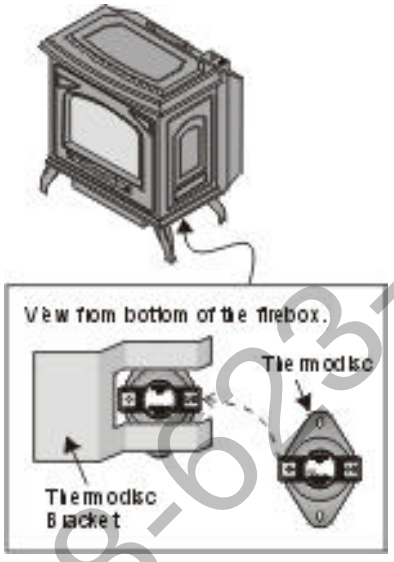

12) Ensure all wires are pulled away from firebox to avoid excessive heat and secure with stick-on wire clip.

13) Re-attach rear access panel with 6 screws, reversing step 7.

NOTE: When power cord is plugged in, speed control is in the ON position and stove is burning, allow 10 - 15 minutes for the thermodisc (temperature switch) to activate and turn on the Fan automatically.

WARNING: Electrical Grounding Instructions
This appliance is equipped with a three pronged (grounding) plug for your protection against shock hazard and should be plugged directly into a properly grounded three-prong receptacle. Do not cut or remove the grounding prong from this plug.

CozyCabin.com 518-623-4349

VENTING INTRODUCTION

The following vent systems in combination with the Tara Direct Vent Freestanding Gas Stove, have been tested and listed as direct vent heater systems by Warnock Hersey:

1) The Minimum Horizontal Termination with the DV Stove Horizontal Riser Vent Kit (Part# 640-944)

2) Vertical Termination using Co-Linear Flex System

3) The DV Stove Horizontal Vent Kit

4) The Simpson Dura-Vent Direct Vent System Model DV-GS venting systems

The Tara uses the "balanced flue" technology Co-Axial system. The inner liner vents products of combustion to the outside while the outer pipe draws outside combustion air into the combustion chamber thereby eliminating the need to use heated room air for combustion and losing warm room air up the chimney.

Note: These flue pipes must not be connected to any other appliance.

The gas appliance and vent system must be vented directly to the outside of the building, and never be attached to a chimney serving a separate solid fuel or gas burning appliance. Each direct vent gas appliance must use it's own separate vent system. Common vent systems are prohibited.

IMPORTANT

Read all instructions carefully before starting the installation. Failure to follow these instructions may create a fire or other safety hazard, and will void the warranty. Be sure to check the venting and clearance to combustible requirements. Consult your local building codes before beginning installation.

The location of the termination cap must conform to the requirements in the Exterior Vent Terminal Locations diagram on page 10.

INSTALLATION PRECAUTIONS

These venting systems are engineered products that have been designed and tested for use with the Tara. The warranty will be voided and serious fire, health or other safety hazards may result from any of the following actions:

1) Installation of any damaged Direct Vent component

2) Unauthorized modification of the Direct Vent System

3) Installation of any component part not manufactured or approved by Simpson Dura-Vent or Fireplace Products International Ltd.

4) Installation other than as instructed by Simpson Dura-Vent and Fireplace Products International Ltd.

Warning: Always maintain required clearances (air spaces) to nearby combustibles to prevent a fire hazard. Do not fill air spaces with insulation.

Be sure to check the vent termination clearance requirements from decks, windows, soffits, gas regulators, air supply inlets and public walkways as specified in the Exterior Vent Terminal Locations on page 9 and in your local building codes.

The gas appliance and vent system must be vented directly to the outside of the building, and never be attached to a chimney serving a separate solid fuel or gas-burning appliance. Each direct vent gas appliance must use it's own separate vent system. Common vent systems are prohibited.

SAFETY PRECAUTIONS FOR THE INSTALLER

1) Wear gloves and safety glasses for protection.

2) Exercise extreme caution when using ladders or on roof tops.

3) Be aware of electrical wiring locations in walls and ceilings.

COMBUSTION AND VENTILATION AIR

The combustion air from this appliance is drawn from outside the building through the outer flue. **Extra provision for combustion air inside the room is not required.**

CozyCabin.com 518-628-4349

EXTERIOR VENT TERMINAL LOCATIONS

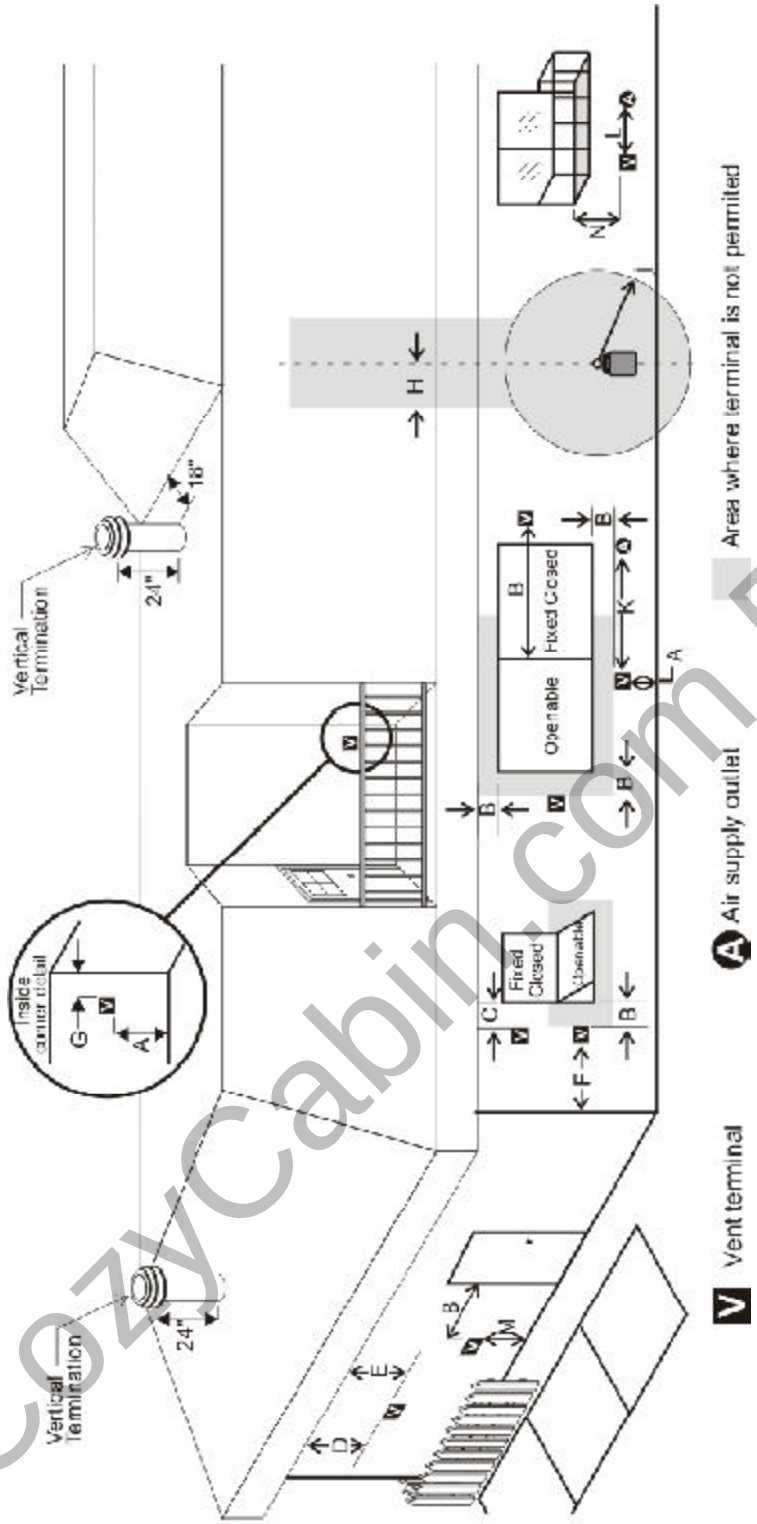

A= Clearance above grade, veranda, porch, deck, or balcony *(min. 12"/30cm)
B= Clearance to window or door that may be opened *(12"/30cm) #(9"/23cm)
C= Clearance to permanently closed window *(min. 12"/30cm)
D= Vertical clearance to ventilated soffit located above the terminal within a horizontal distance of (24"/60cm) from the centerline of the terminal (min. 18"/46cm) check with local code.
E= Clearance to unventilated soffit (min. 12"/30cm)
F= Clearance to outside corner: with ***AstroCap*** Termination Cap (min. 6"/15cm), with Dura-Vent Termination Cap (14"/36cm)
G= Clearance to inside corner: with ***AstroCap*** Termination Cap (min. 6"/15cm), with Dura-Vent Termination Cap (12"/30cm)
H= Not to be installed above a meter/regulator assembly within (3'/90cm) horizontally from the centerline of the regulator.
J= Clearance to service regulator vent outlet *(min. 36"/90cm)
K= Clearance to non-mechanical air supply inlet to building or the combustion air inlet to any other appliance *(12"/30cm) #(9"/23cm)
L= Clearance to a mechanical air supply inlet *(min. 72"/1.8m) #3' (91cm) above if within 10' (3m) horizontally.
M= **Clearance above paved sidewalk or a paved driveway located on public property *(min. 84"/2.1m)
N= Clearance under veranda, porch, deck, or balcony *(min. 12"/30cm)***

Note: * As specified in CGA B149 Installation Code. Note: Local codes or regulations may require different clearances.
**A vent shall not terminate directly above a sidewalk or paved driveway which is located between two single family dwellings and serves both dwellings.
***Only permitted if veranda, porch, deck, or balcony is fully open on a minimum of two sides beneath the floor.
#In accordance with the current ANSI Z223.1 / NFPA 54, National Fuel Gas Code.

CozyCabin.com 503-623-4349

RESIDENTIAL AND MANUFACTURED HOMES / MOBILE HOMES MINIUMUM HORIZONTAL TERMINATION INSTALLATIONS

Planning Your venting Installation

See page 9 for Exterior Vent Termination requirements. The T25 is approved for a minimum horizontal termination with the Regency Riser Vent Kit. See the diagram for minimum and maximum pipe lengths.

When planning your installation, it will be necessary to select the proper length of vent pipe for your particular requirements. Determine the minimum clearance to combustibles from the rear of the unit to the wall. It is also important to note the wall thickness. Before cutting the vent hole through the wall ensure that ALL vent and termination clearances (see page 10) will be met.

The venting arrangements shown on the diagram, have a minimum of 75% (flue loss) efficiency with Fan Off, as required for manufactured homes. (Actual efficiency may be as high as 85%.)

*****If this is an outside corner, the minimum distance between the vent and the outside corner is 6" (15cm). See "F" on the diagram on page 10.

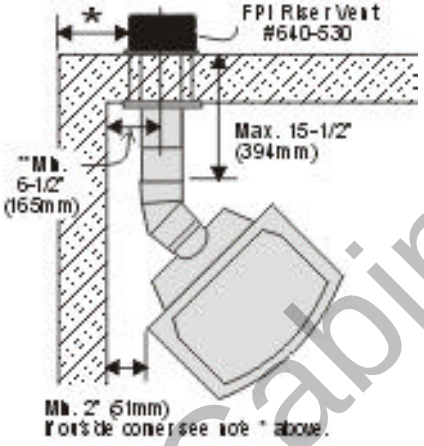

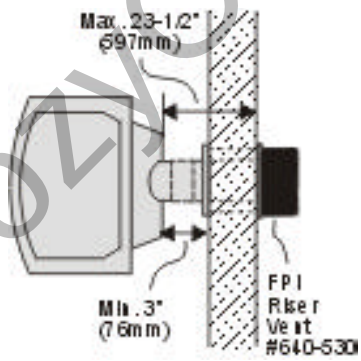

NOTE: Ensure compliance with the outside vent terminal location before cutting hole as both dimensions must be met.

You will require the following components with your new Regency Rear Vent Direct Vent Freestanding Gas Stove. Please review your product to make sure you have everything you need. In the event that you are missing any part, contact your dealer. Decorative brass or chrome trim kits are available from Simpson Dura-Vent for their wall thimbles, as well as a square wall thimble cover.

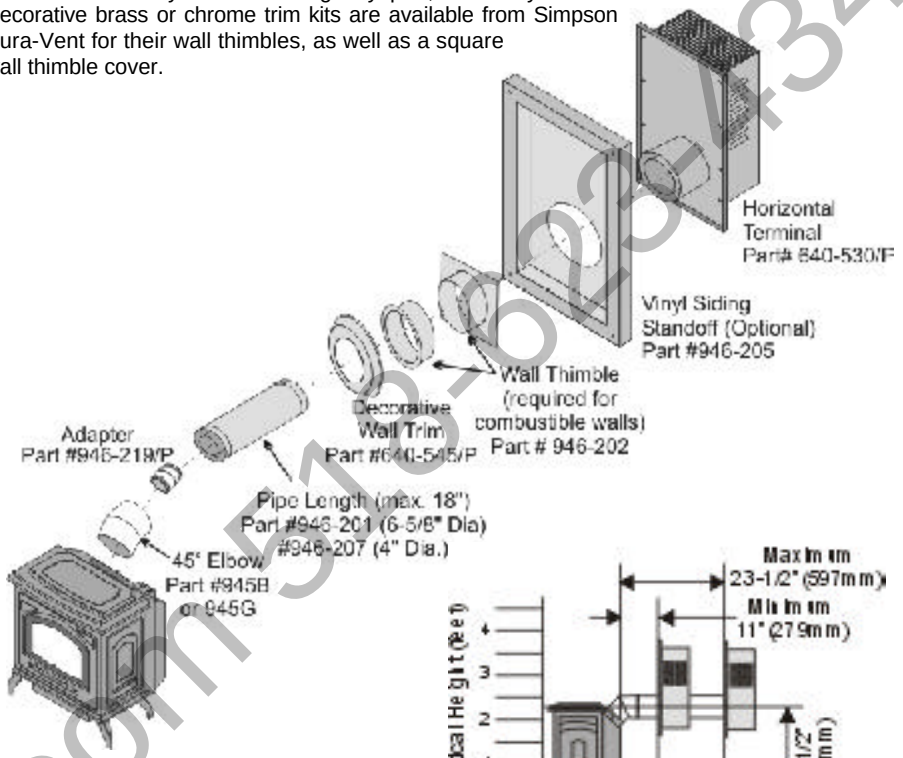

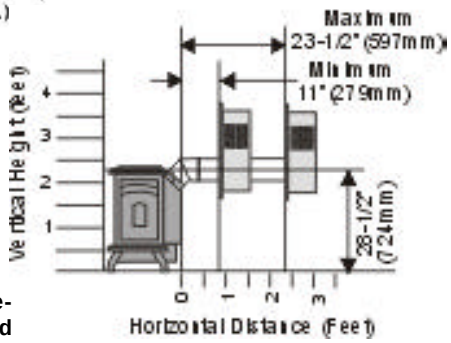

Note: These are the minimum pieces required. Other parts may be required for your particular installation.

Minimum components for a Horizontal Installation:

640-944	Horizontal Termination Kit which includes:	
	1 946-201	6-5/8" Dia. x 18" Black Pipe
	1 946-207	4" Dia. x 18" Aluminum Vent
	1 946-202	Wall Penetration Heat Shield (Wall Thimble) (2 pcs)
	1 640-530	Riser Vent Terminal
	1 640-545	Decorative Wall Trim (Black)
	1 948-128	Tube Mill-Pac
		Screws
945G*	1 45° Elbow	
946-219	1 Adapter	

Optional Components:

946-204	45° Elbow - 6-5/8" Black pipe and 4" Aluminum Vent
946-205	Vinyl Siding Shield for Riser Vent Terminal
946-208/P	Vent Guard
940	Square Wall Thimble Cover*
981	Snorkel Termination (36")*
982	Snorkel Termination (14")*
942	Wall Penetration Heat Shield*

* Simpson Dura-Vent components

CozyCabin.com 513-623-4349

HORIZONTAL INSTALLATIONS

1) Set the unit in its desired location. Check to determine if wall studs are in the way when the venting system is attached. If this is the case, you may want to adjust the location of the unit.

2) Assemble the desired combination of pipe and elbow to the appliance adapter with pipe seams oriented down. Offset the pipe seams as double seams in one place will cause the outer pipe to take an oval shape. Kit comes complete with 18" of straight vent - 6-5/8" dia. black outer pipe and 4" dia. inner vent.

3) With the pipe attached to the stove, slide the stove into its correct location, and mark the wall for a 9-1/2" (inside dimensions) round hole. The center of the round hole should line up with the centerline of the horizontal pipe, as shown in diagram 1. Cut and frame the 9-1/2 round hole in the exterior wall where the vent will be terminated. If the wall being penetrated is constructed of non-combustible material, i.e. masonry block or concrete, a 7" diameter hole is acceptable.

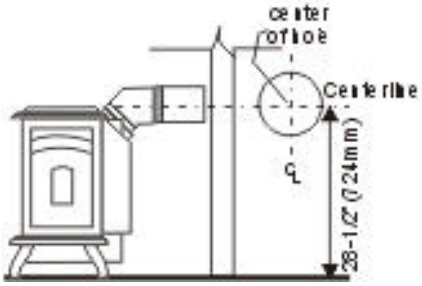

Diagram 1

Note:

a) The horizontal run of vent should have a 1/4 inch rise for every 1 foot of run towards the termination. Never allow the vent to run downward. This could cause high temperatures and may present the possibility of a fire.

b) The location of the horizontal vent termination on an exterior wall must meet all local and national building codes, and must not be blocked or obstructed. For External Vent Terminal Locations, see diagram on page 9.

c) Snorkel Terminations:
For installations requiring a vertical rise on the exterior of the building, 14-inch and 36-inch tall Snorkel Terminations as shown in Dia. 2 are available, as well as the standard Riser Vent. Follow the same installation procedures as used for standard Horizontal Termination. NEVER install the snorkel upside down.

*Dia 2a & 2b: As specified in CGA B149 Installation Code. Local codes or regulations may require different clearances.

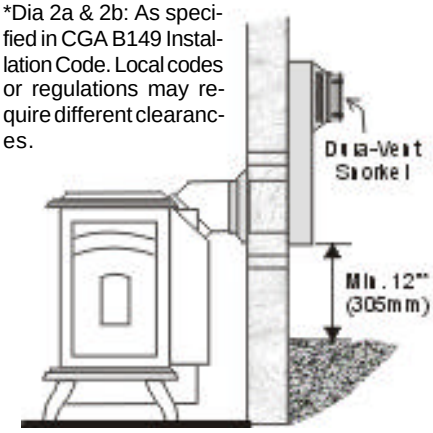

Diagram 2a

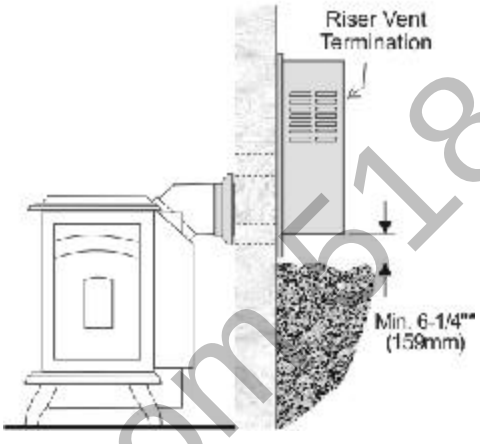

Diagram 2b

NOTE: For Snorkel terminations in ABOVE grade installations, follow national or local code requirements.

Below Grade Snorkel Installation
If the Snorkel Termination must be installed below grade, i.e. basement application, proper drainage must be provided to prevent water from entering the Snorkel Termination. Refer to Dura-Vent Installation instructions for details.. Do not attempt to enclose the Snorkel within the wall, or any other type of enclosure.

4) Install wall penetration heat shield in the center of the 9-1/2" round hole and attach with wood screws. The four wood screws provided should be replaced with appropriate fasteners for stucco, brick, concrete, or other types of sidings. Dia. 3.

5) If installing termination on a siding covered wall, a vinyl siding standoff or furring strips must be used to ensure that the termination is not recessed into the siding. Dia. 3.

6) Take the Riser Vent terminal and separate the Backing Plate from the Riser Vent Front by removing 8 screws as shown in diagram 4.

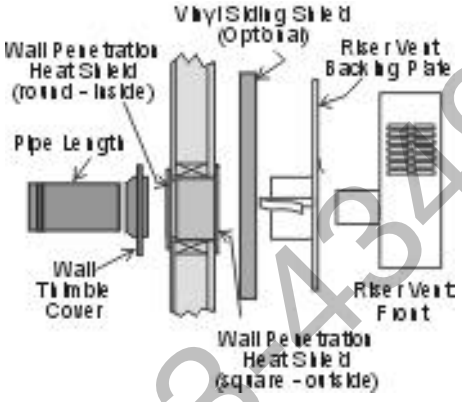

Diagram 3

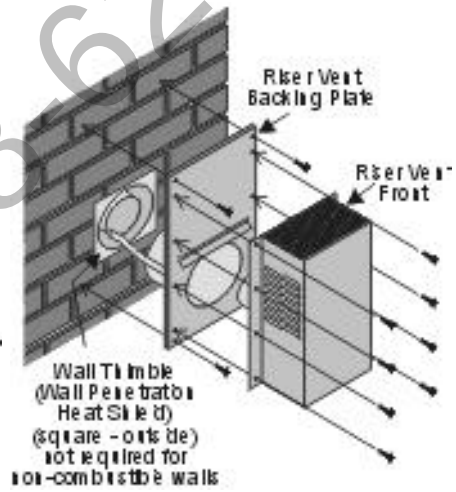

Diagram 4

7) Install the Backing Plate into the wall penetration heat shield and attach using 4 screws. Dia. 4.

8) Connect all pipe sections to unit and install into wall:

a) Measure pipe length required and cut to length. Hint: use the cut end of the 6-5/8" dia. outer pipe at the vent terminal end.

b) Push the pipe sections completely together, the minimum pipe overlap is 1-1/4". Secure all outer pipe joints by using at least two screws. Locate the screws at the bottom of the pipe so that the screw heads are hidden on the final installation. Apply sealant "Mill-Pac" to inner pipe and high temp silicone sealant or "Mill-Pac" to outer pipe on every joint.

Hint: Apply sealant to female end.

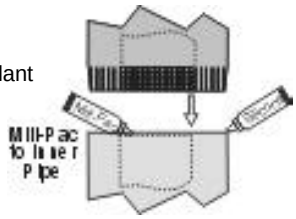

CopyCabin.com 518-623-4349

c) Before connecting the vent pipe to the vent termination, slide the black decorative wall thimble cover over the vent pipe, then slide the Wall Penetration Heat Shield (Part # 946-202) over the vent pipe. Dia. 3.

d) Slide the appliance and vent assembly towards the wall carefully inserting the vent pipe into the riser vent terminal assembly. It is important that the vent pipe extends into the Riser Vent Backing Plate a sufficient distance so as to result in a minimum pipe overlap of 1-1/4 inches. Secure the connection between the vent pipe and the vent cap by attaching the two sheet metal strips extending from the Riser Vent Backing Plate into the outer wall of the vent pipe. Use two aluminum screws provided to connect the strips to the pipe section. Bend any remaining portion of the sheet metal strip back towards the vent cap and cut off any excess, it will be concealed by the decorative wall thimble cover. See diagram 5.

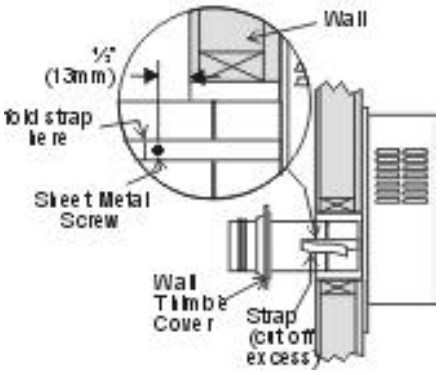

Diagram 5

8) Slide the decorative wall thimble up to the wall surface being careful not to scratch the paint. See diagram 5.

9) Back outside: Apply sealant to the 4" inner flue and slide the Riser Vent Front into the Backing Plate and fasten with 8 screws.

IMPORTANT:
When connecting the pipe to the Riser Vent, apply Mill-Pac to the inner pipe on the Riser Vent Terminal, around the bead. Ensure that the vent pipe is pushed past the bead for a secure fit.

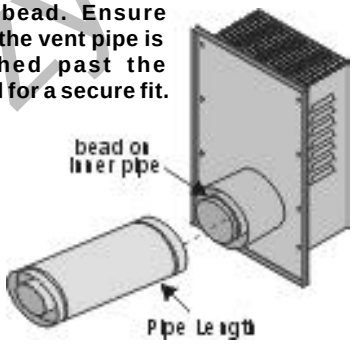

10) Seal around the outer edge of the Riser Vent Backing Plate.

VERTICAL TERMINATION WITH CO-LINEAR FLEX SYSTEM

THE APPLIANCE MUST NOT BE CONNECTED TO A CHIMNEY FLUE SERVING A SEPARATE SOLID FUEL BURNING APPLIANCE.

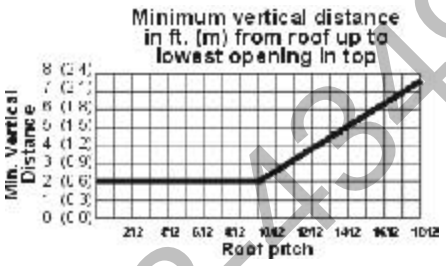

This appliance is designed to be attached to two 3" (76mm) co-linear aluminium flex running the full length of the chimney. The flue length must be a minimum length of 8 ' (2.44m) and a maximum of 35' (10.7m). See chart for minimum distances from roof. Periodically check that the vent is unrestricted.

Masonry chimneys may take various contours which the flexible liner will accommodate. However, **keep the flexible liner as straight as possible**, avoid unnecessary bending.

The Air Intake pipe must be attached to the inlet air collar of the termination cap.

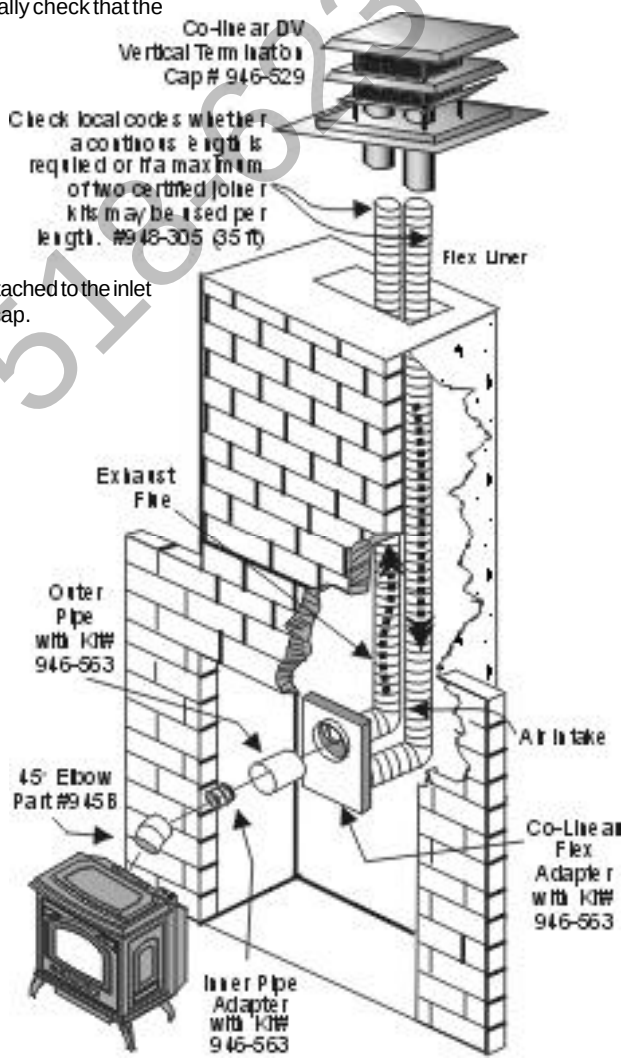

Required Parts:

Part #	Description
945G	45° Elbow
946-529	Co-linear DV Vertical Termination Cap
948-305	3" Flex - 35 ft.
270-944	U27 Dura-Vent Adapter
946-563	Co-Axial to Co-Linear Adapter Kit which contains the following: Co-linear Flex Adapter (270-585) Outer Pipe (946-257) Inner Pipe Adapter (946-219)

Alternate Approved Caps

980	Vertical Termination Cap
991	High Wind Cap
923GK	3" Co-linear Adapter with flashing

CozyCabin.com 518-623-4349

DV STOVE HORIZONTAL VENT KIT

DV Stove Horizontal Vent Kit (2 ft. Part # 946-116 or 4 ft. Part # 946-216) includes all the parts needed to install the U29-2 or U45-3 with minimum horizontal and vertical vent dimensions. For installations that require longer vertical and/or horizontal vents use the Dura-Vent system as shown on page 18.

	Qty.	Description
1)	1	Rigid Pipe Section (Kit # 946-116: 2 ft. (1.2m) length, Kit # 946-216: 4 ft. (1.2m) length), 6-1/2" (165mm) inside diameter
2)	1	Flex Liner, compressed aluminium 2 ply liner, 4" (102mm) inside diameter
3)	4	spring spacers
4)	1	90 deg. Elbow
5)	1	Adjustable pipe section 13-1/2" to 24" (343mm x 610mm), 2 pieces
6)	1	Thimble Cover
7)	1	Wall Thimble (2 pcs.)
8)	1	Adapter
9)	1	***AstroCap*** Termination Cap
10)	2	Trim Collar
11)	1	tube of Mill-Pac, high temperature sealant
12)	12	Screws, #8 x 1/2" Self tapping, Stainless Steel
13)	14	Screws, #8 x 1/2" Self tapping, Black
14)	4	Screws #8 x 1-1/2" Drill Point, Black
15)	4	Screws #8 x 1-1/2" Drill Point, Stainless Steel
16)	8	Wood screws #8 x 1"

Required but not included in above Kit:
45° Elbow (Part #: 946-214)

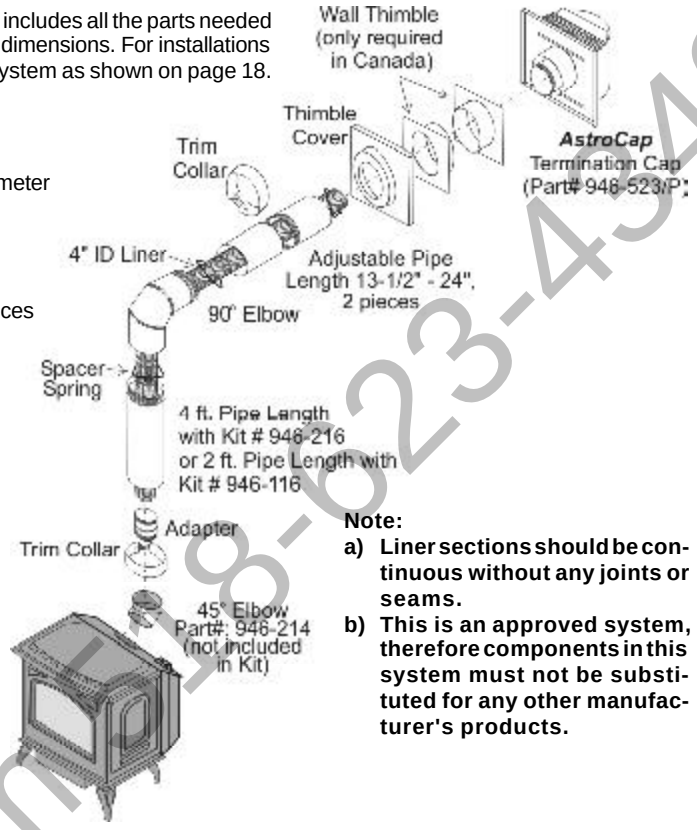

Note:
a) Liner sections should be continuous without any joints or seams.
b) This is an approved system, therefore components in this system must not be substituted for any other manufacturer's products.

DV STOVE HORIZONTAL VENT KIT (#946-116 & #946-216) INSTALLATION

Review the following sequence of instructions which are typical of most installations. The sequence may vary depending on wall thickness. **Refer to pages 11 to 18 for vent location and clearance dimensions.**

1) Set the unit in its desired location. Check to determine if wall studs will be in the way of the venting system, adjust location until all clearances are met and there are no obstructions.

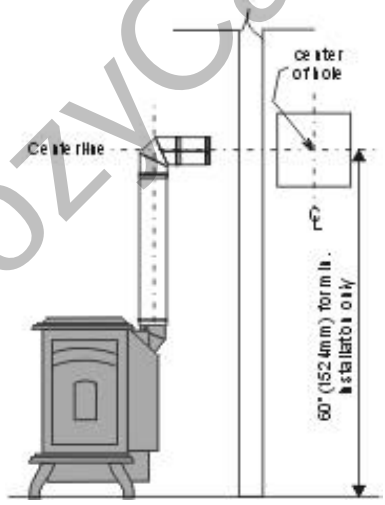

Note: A 1-1/2" (38mm) clearance around the outer pipe must be maintained except that only a 1" (25mm) clearance is needed at the termination end.

IMPORTANT:
Do not locate termination hood where excessive snow or ice build-up may occur. Be sure to check vent termination area after snow falls, and clear to prevent accidental blockage of venting system. When using snow blowers, make sure snow is not directed towards vent termination area.

2) Assemble a **trial fit** to determine the vertical center-line for the vent termination.

   a) Cut a 9-1/2" x 9-1/2" (241mm x 241mm) square hole on both the interior and exterior wall.

   b) Install wall thimbles on both interior and exterior wall with 4 wood screws (#8 x 1") per thimble.

   c) Attach the 2 piece adjustable pipe section to the vent terminal and slide into position from the exterior. **The larger diameter end of the adjustable pipe goes to the vent terminal.**

   d) Install the 90° elbow onto the adjustable pipe to determine the vertical centerline.

   Note: if the centerline cannot be met, the adjustable sections will have to be cut.

   e) Cut the 2 ft. or 4 ft. section of rigid pipe to length. Attach the 45° elbow to the rigid pipe, and ensure that the pipe length when cut (with the 45° elbow) will seat onto both the starter collar and the 90° elbow. **Crimped section of rigid pipe seats into the 90° elbow. Only cut the uncrimped side of pipe.**

   Dismantle all pipe sections including vent terminal.

3) Attach the 4" dia. flex liner to the vent terminal ensuring that the flex overlaps the collar of the vent terminal by a minimum

CozyCabin.com 1-8-623-4349

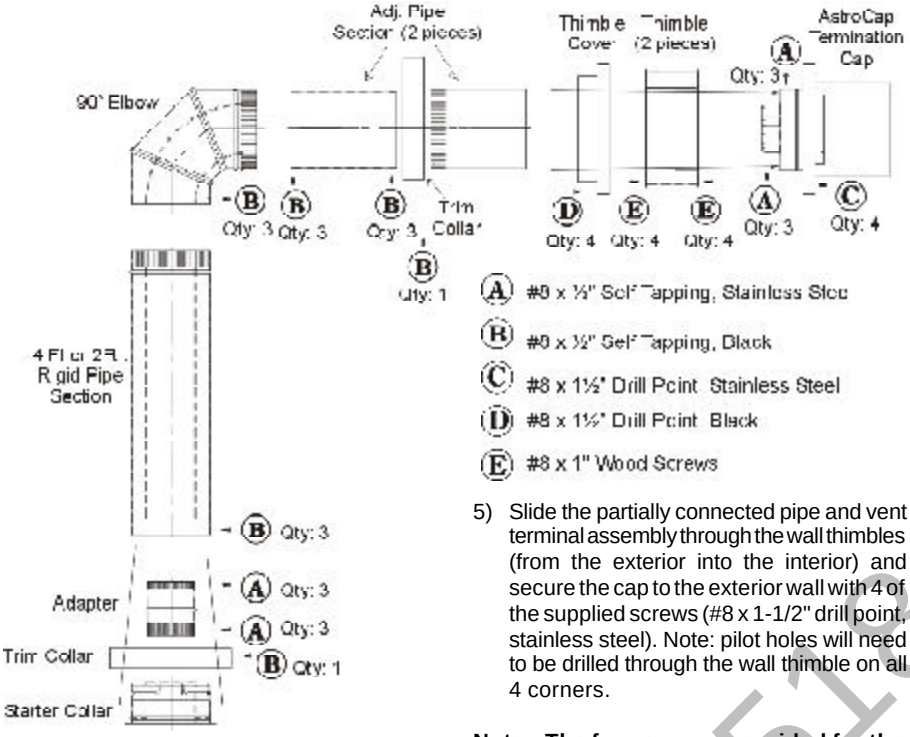

of 1-3/8"(35mm). Use Mill-Pac to seal and secure with 3 of the #8 x 1/2" screws (stainless steel).

4) Attach the adjustable pipe section to the vent terminal using Mill-Pac and/or high temperature silicone and attach with 3 of the #8 x 1/2" screws (stainless steel).

Hint: Apply the sealant (Mill-Pac and/or high temperature silicone) to the outer pipe before connecting the inner pipe.

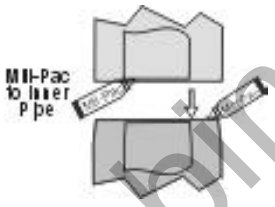

Note: The pipe seam should be facing down.

Note: To make the installation more aesthetically pleasing, we recommend framing out a square that the cap can be mounted on.

Note: If installing termination on a siding covered wall, a vinyl siding standoff or furring strips must be used to ensure that the termination is not recessed into the siding. For vinyl siding standoff installation refer to the Dura-Vent Termination instructions.

5) Slide the partially connected pipe and vent terminal assembly through the wall thimbles (from the exterior into the interior) and secure the cap to the exterior wall with 4 of the supplied screws (#8 x 1-1/2" drill point, stainless steel). Note: pilot holes will need to be drilled through the wall thimble on all 4 corners.

Note: The four screws provided for the vent cap should be replaced with appropriate fasteners for stucco, brick, concrete, or other types of sidings.

6) A bead of non-hardening mastic should be run around both the termination and vinyl siding standoff to prevent water from entering and to make a tight seal between the cap and the standoff.

7) Stretch the 4" dia. flex liner out fully and get a trial fit of the liner onto the 4" dia. starter collar.

8) Cut the 4" dia. flex liner to the desired size.

Hint: leave an extra 12" to 16" of length, this will make the final assembly easier to work with.

9) Secure the 4" dia. flex liner to the 4" adapter with Mill-Pac and 3 of the #8 x 1/2" screws (stainless steel).

10) Slide the decorative Thimble Cover over the pipe sections and secure with 4 screws (#8 x 1-1/2" drill point, black) to the wall.

11) Slide the 90° elbow (crimp end up), the 45° elbow and the 2 ft. or 4 ft. pipe section (crimp end up) over the 4" dia. flex liner.

12) Slide the trim collar over the adjustable pipe sections to cover the joint of the telescopic section.

13) Install the spring spacers onto the pipe sections.

14) Secure the 4" dia. flex liner with adapter onto the stove collar. Put a bead of Mill-Pac around the appliance adapter and secure with 3 screws (#8 x 1/2, stainless steel).

15) Attach the 45° elbow onto the starter collar by sealing with Mill-Pac and/or high temperature silicone and securing with 3 of the #8 x 1/2" (black) screws.

16) Attach the pipe section to the 45° elbow by sealing with Mill-Pac and/or high temperature silicone and securing with 3 of the #8 x 1/2" screws (black). Pipe seams should be facing the wall.

17) Attach the 90° elbow onto the pipe section by sealing with Mill-Pac and/or high temperature silicone and securing with 3 of the #8 x 1/2" screws (black).

18) Slide the adjustable pipe section onto the 90° elbow. The flex may have to be compressed back in order for the adjustable pipe to properly mate to the elbow. Seal with Mill-Pac and/or high temperature silicone and secure with 3 of the #8 x 1/2" screws (black). Pipe seams facing down.

18) Install the trim collar over the starter collar and secure with a #8 x 1/2" screw (black).

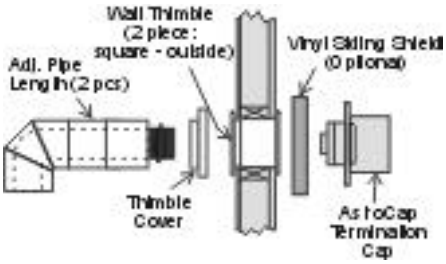

If the pipe needs to be touched up, use only Stove Brite High Temperature Metallic Black Stove Paint.

NOTE: All inner joints must be sealed with Mill-Pac. All outer joints may be sealed with high temperature silicone.

DURA-VENT TERMINATION KIT

Planning Your Dura-Vent Installation

There are two basic types of Dura-Vent Direct Vent System installations: horizontal termination and vertical termination. Confirm the maximum horizontal run and maximum vertical rise from the diagram on page 18.

When planning your installation, it will be necessary to select the proper length of vent pipe for your particular requirements. For horizontal installations, determine the minimum clearance

CozyCabin.com 519-623-1329

from the rear of the unit to the wall. It is also important to note the wall thickness. (The wall thimble is suitable for 2 x 4 or 2 x 6 wall construction.) Select the amount of vertical rise desired for "vertical-to-horizontal" type installations.

The minimum clearance of 1-1/4" (32mm) is required between the outer wall of the vent pipe and nearby combustible surfaces. Be sure to check the vent termination clearance requirements from decks, windows, soffits, gas regulators, air supply inlets and public walkways as specified in the Exterior Vent Terminal Locations on page 9 and in your local building codes.

To determine the length of vent pipe required for vertical installations, measure the distance from the unit flue outlet to the ceiling, the ceiling thickness, the vertical rise in an attic or second storey, and allow for sufficient vertical height above the roof line.

For multi-storey applications, fire stops are required at each floor level. If an offset is needed, additional pipe, elbows and supports will be required.

Do not exceed the maximum number of elbows. One 90° for horizontal terminations and two 45° for vertical termination.

RIGID PIPE VENTING COMPONENTS

Parts not supplied by Dura-Vent

946-506/P	Vent Guard (Optional)
640-530	Riser Vent Terminal (Optional)
948-128	Vinyl Siding Shield for Riser Vent Terminal
946-228	Horizontal Square Termination Cap

You will require the following components with your new Waterford Direct Vent Freestanding Gas Stove. Please review your product to make sure you have everything you need. In the event that you are missing any part, contact your dealer.

Note: These are the minimum pieces required. Other parts may be required for your particular installation. See page 15 for a list of vent parts.

If installing termination on a siding covered wall, a vinyl siding standoff or furring strips can be used in order to ensure that the termination is not recessed into siding.

The vinyl siding standoff is required for walls with vinyl siding.

Minimum components for a Dura-Vent Horizontal Installation:

A) Dura-Vent Horizontal Termination Cap
B) Round Support Box/Wall Thimble
C) Pipe Length (length varies)
D) 90° Elbow
E) Pipe Length (Min. 24")
F) Adapter (Part # 946-219)
G) 45° Elbow (Part # 945B)

Minimum components for a Dura-Vent Vertical Termination:

H) Dura-Vent Vertical Termination Kit
See page 16 for pipe lengths.

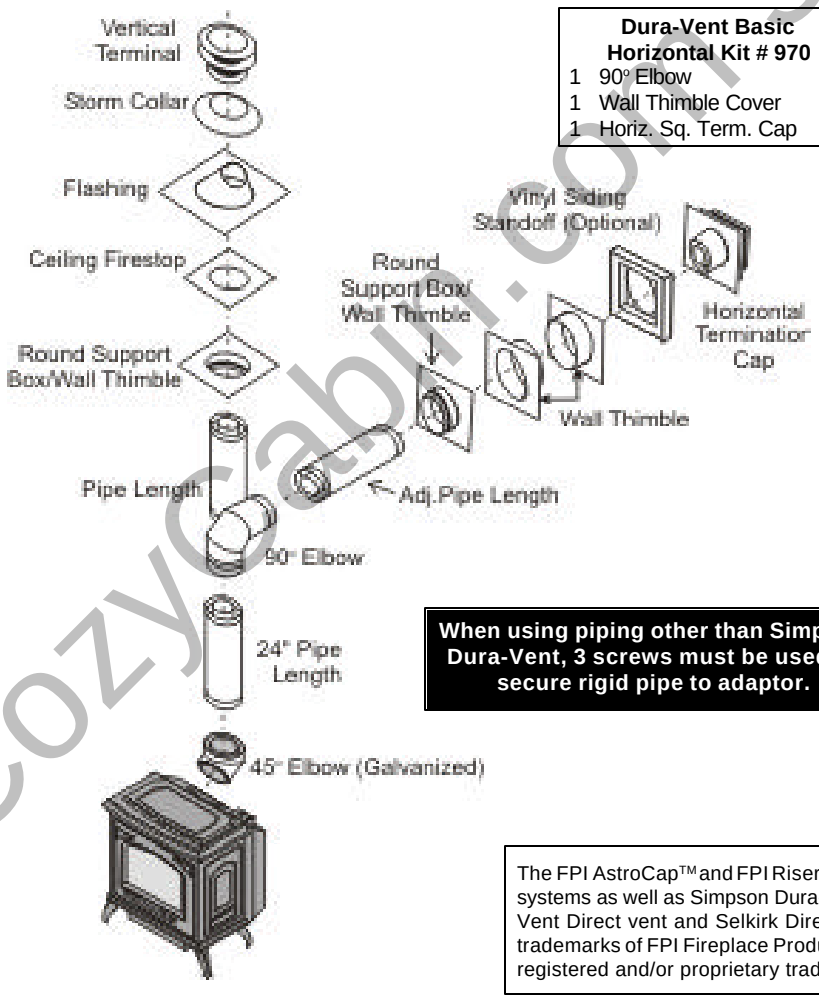

Dura-Vent Basic Horizontal Kit # 970

1 90° Elbow
1 Wall Thimble Cover
1 Horiz. Sq. Term. Cap

When using piping other than Simpson Dura-Vent, 3 screws must be used to secure rigid pipe to adaptor.

Alternate Horizontal Termination Caps

AstroCap
Part# 946-523/P

Alternate Horizontal Riser Vent Terminal Part# 640-530/P

WARNING:
Do not combine venting components from different venting systems.

However use of the the AstroCap™ and FPI Riser is acceptable with all systems.

This product has been evaluated by Intertek for using a Dura-Vent Flue Adaptor in conjunction with Selkirk Direct-Temp and Ameri Vent Direct venting systems. Use of these systems with the Direct Vent GS starting collar is deemed acceptable and does not affect the Intertek WHI listing of components.

The FPI AstroCap™ and FPI Riser Vent terminal is certified for installations using FPI venting systems as well as Simpson Dura-Vent®, Direct Vent GS, American Metal Products, Ameri Vent Direct vent and Selkirk Direct-Temp. FPI™, and FPI AstroCap™ are the proprietary trademarks of FPI Fireplace Products International Ltd. Dura-Vent® and Direct Vent GS are registered and/or proprietary trademarks of Simpson Dura-Vent Co. Inc.

CozyCabin.com 518-623-4349

RIGID PIPE VENTING COMPONENTS LIST

All Simpson Dura-Vent components are available directly from FPI.

Description	Simpson Dura-Vent Direct VentGS[R]	Selkirk Direct-Temp™	Amerivent[R] Direct Vent
6" Pipe Length, Galvanized	908	4DT-6	N/A
6" Pipe Length, Black	908B	4DT-6B	N/A
7" Pipe Length, Galvanized	N/A	N/A	4D7
7" Pipe Length, Black	N/A	N/A	4D7B
9" Pipe Length, Galvanized	907	4DT-9	N/A
9" Pipe Length, Black	907B	4DT-9B	N/A
12" Pipe Length, Galvanized	906	4DT-12	4D12
12" Pipe Length, Black	906B	4DT-12B	4D12B
18" Pipe Length, Galvanized	N/A	4DT-18	N/A
18" Pipe Length, Black	N/A	4DT-18B	N/A
24" Pipe Length, Galvanized	904	4DT-24	4D2
24" Pipe Length, Black	904B	4DT-24B	4D2B
36" Pipe Length, Galvanized	903	4DT-36	4D3
36" Pipe Length, Black	903B	4DT-36B	4D3B
48" Pipe Length, Galvanized	902	4DT-48	4D4
48" Pipe Length, Black	902B	4DT-48B	4D4B
Adjustable Length, 11"-14", Galv.	911	4DT-AJ	N/A
Adjustable Length, 11"-14", Black	911B	4DT-AJB	N/A
Adjustable Length, 17"-24", Black	917B	N/A	N/A
Adjustable Length, 7" Galvinized	N/A	N/A	4D7A
Adjustable Length, 7" Black	N/A	N/A	4D7AB
Adjustable Length, 12" Galvinized	N/A	N/A	4D12A
Adjustable Length, 12" Black	N/A	N/A	4D12AB
45° Elbow, Galvinized	945	4DT-EL45	4D45L
45° Elbow, Black	945B	4DT-EL45B	4D45LB
45° Elbow, Swivel, Galvinized	945G	N/A	N/A
45° Elbow, Swivel, Black	945BG	N/A	N/A
90° Elbow, Galvinized	990	4DT-EL90S	4D90LS
90° Elbow, Black	990B	4DT-EL90SB	4D90LBS
90° Elbow, Swivel, Galvinized	990G	N/A	N/A
90° Elbow, Swivel, Black	990BG	N/A	N/A
Ceiling Support	949 - n/a from FPI	4DT-CS	4DFSP
Cathedral Support Box	941	4DT-CSS	4DRSB
Wall Support/Band	988	4DT-WS/B	4DWS
Offset Support	989 - n/a from FPI	4DT-OS	N/A
Wall Thimble, Black	942	4DT-WT	4DWT
Wall Thimble Support Box/Ceiling Support	940	N/A	N/A
Firestop Spacer	963	4DT-FS	4DFSP
Trim Plate, Black	N/A	4DT-TP	4DFPB
Brass Trim for Wall Thimble/Ceiling Support	3951	N/A	N/A
Attic Insulation Shield 12"	N/A	N/A	4DAIS12
Attic Insulation Shield - Cold Climates 36"	N/A	N/A	4DAIS36
Basic Horizontal Termination Kit (A)	970	4DT-HKA	4DHTK2
Horizontal Termination Kit (B)	971	4DT-HKB	4DHTK1
Vertical Termination Kit	978	4DT-VKC	4DVTK
High Wind Vertical Cap	991	N/A	N/A
High Wind Horizontal Cap	985	N/A	N/A
Horizontal Square Termination Cap	984	4DT-HHC	4DHC
Verical Termination Cap	980	4DT-HVC	4DVC
Storm Collar	953	4DT-SC	4DSC
Adjustable Flashing, 0/12-6/12	943	4DT-AF6	4DF
Adjustable Flashing, 6/12-12/12	943S	4DT-AF12	4DF12
Vinyl Siding Standoff	950	4DT-VS	N/A
Vinyl Siding Shield Plate	N/A	4DT-VSP	N/A
Snorkel Termination 14"	982	4DT-ST14	4D12S
Snorkel Termination 36"	981	4DT-ST36	4D36S

946-506/P	Vent Guard (Optional)	946-523/P	AstroCap Horizontal Cap
946-205	Vinyl Siding Shield for Riser Vent Terminal	946-206	Vinyl Siding Standoff - AstroCap
946-208/P	Vent Guard (Optional) - Riser Vent Terminal	640-530/P	Riser Vent Terminal

CozyCabin.com 518-623-4349

RIGID PIPE VENTING - HORIZONTAL TERMINATIONS

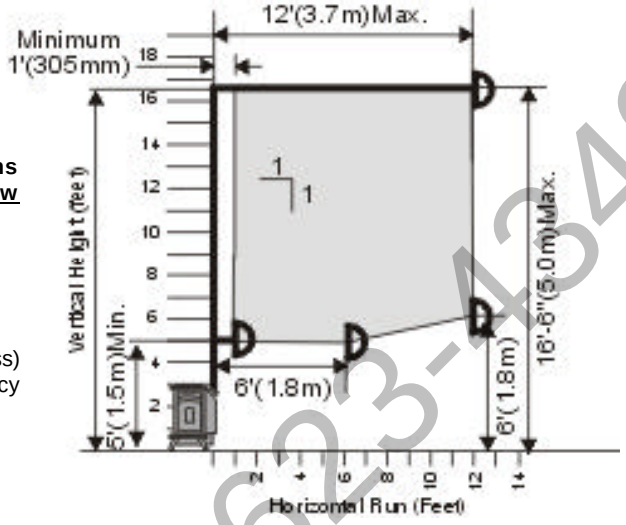

The shaded area in the diagram below shows all allowable combinations of vertical runs with horizontal terminations. Maximum one 90° elbow (two 45° elbows equal one 90° elbow) using Dura-Vent Venting Systems

Residential and Manufactured Homes / Mobile Homes Installations

The venting arrangements diagrammed below, have a minimum of 75% (flue loss) efficiency with Fan Off, as required for manufactured homes. (Actual efficiency may be as high as 85%.)

RIGID PIPE VENTING - VERTICAL TERMINATIONS

for both Residential & Manufactured Homes/Mobile Homes

The shaded areas in the two diagrams below show all allowable combinations of straight vertical and offset to vertical runs with vertical terminations. Maximum two 45° elbows (not including the 45° elbow attached to the unit.). All vertical and offset to vertical vent installations require Vent Restrictor #1. If the vent is ENCLOSED in a chase (min. size 9" x 9") maintain a 1-1/4" clearance to combustibles.

Straight Vertical Terminations

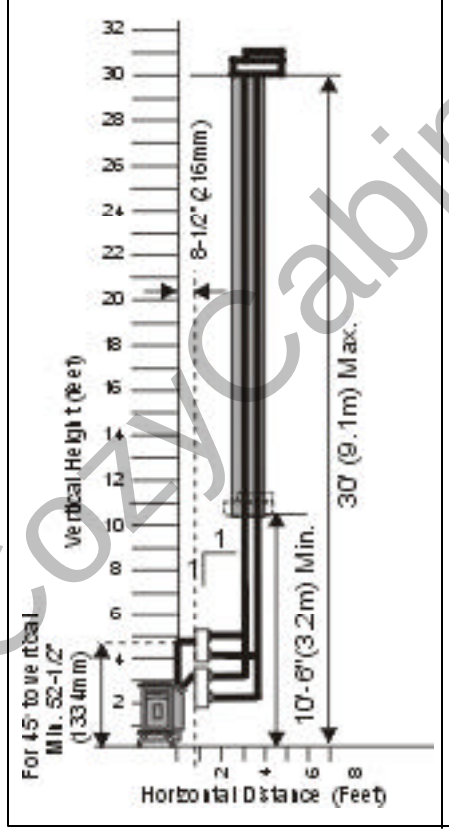

Offset to Vertical Terminations

Vent Restrictor must be set at 5/8" for this venting installation.

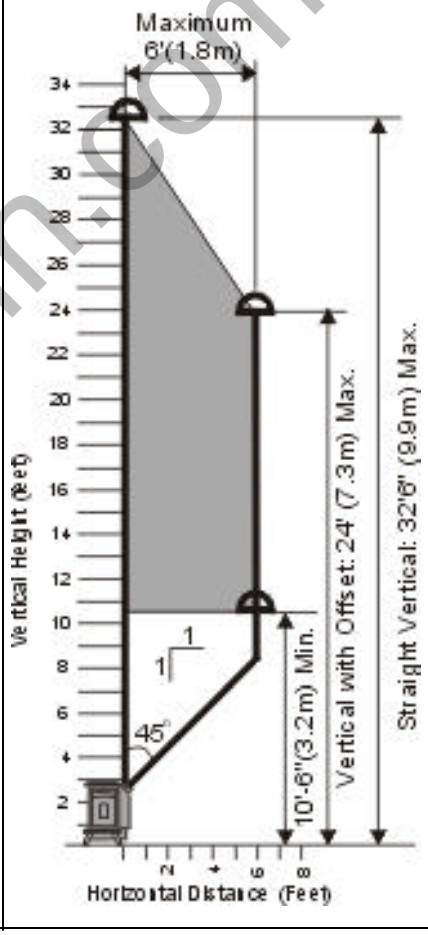

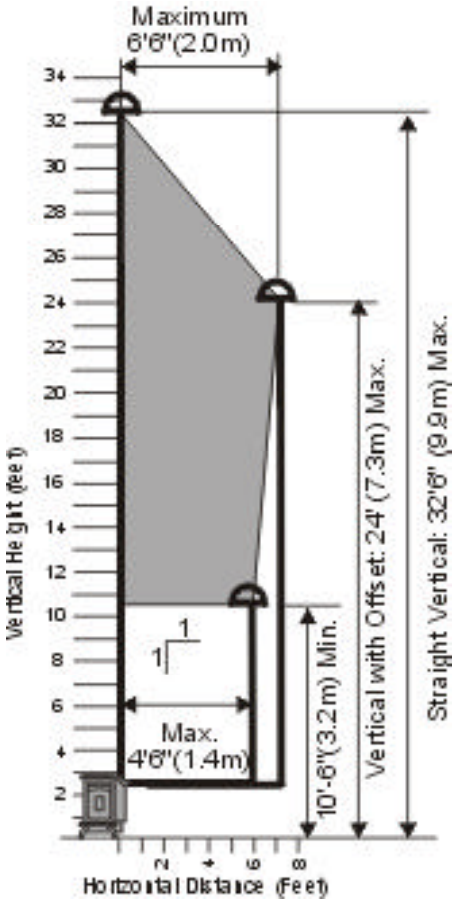

CozyCabin.com 518-623-4349

VENT RESTRICTOR

The above Offset to Vertical Installation requires more restriction, the Vent Restrictor must be set to 5/8" (16mm).

The Vent Restrictor on the stove comes preset with a 7/8" (22mm) opening. The Vent Restrictor is located inside the firebox over the flue outlet.

To adjust the restrictor simply use a large phillips screwdriver to loosen the 2 retaining screws and slide the restrictor up to a 5/8" gap. Tighten the screws to secure it in position.

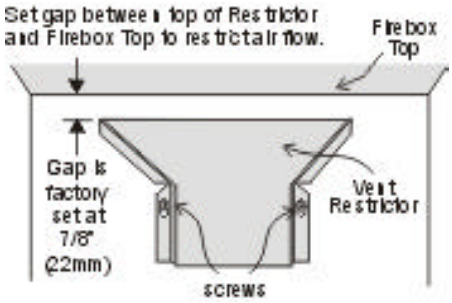

DURA-VENT HORIZONTAL INSTALLATIONS

1) Set the unit in its desired location. Check to determine if wall studs or roof rafters are in the way when the venting system is attached. If this is the case, you may want to adjust the location of the unit.

2) Direct Vent pipe and fittings are designed with special twist-lock connections to connect the venting system to the appliance flue outlet. A twist-lock appliance adapter is installed on the unit at the factory. Assemble the desired combination of pipe and elbows to the appliance adapter with pipe seams oriented towards the wall or ceiling, as much out of view as possible. The final positioning of the pipe and 90° elbow assembly is determined by the mounting orientation of the adapter on the stove and twist-locked for a solid connection.

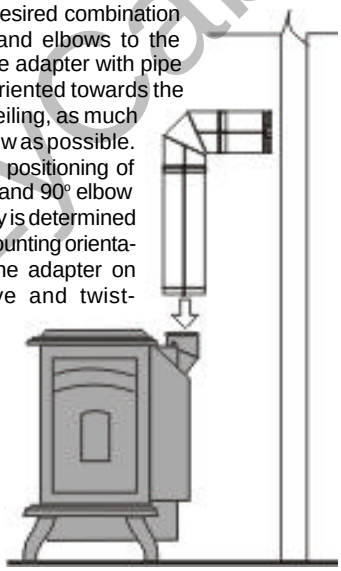

Note:

a) Twist-lock procedure: Four indentations, located on the female ends of pipes and fittings, are designed to slide straight onto the male ends of adjacent pipes and fittings, by orienting the four pipe indentations so they match and slide in to the four entry slots on the male ends (diagram 1). Push the pipe sections completely together, then twist-lock one section clockwise approximately one-quarter turn, until the two sections are fully locked. The female locking lugs will not be visible from the outside on the Black Pipe or fittings. They may be located by examining the inside of the female ends. Apply sealant "Mill-Pac" to inner pipe and high temp silicone sealant to outer pipe on every twist-lock joint.

Hint: Apply silicone to female end.

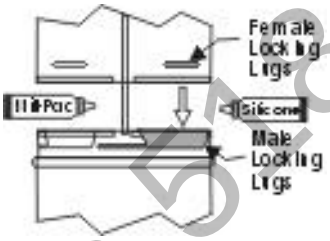

Diagram 1

b) Horizontal runs of vent must be supported every three feet. Wall straps are available for this purpose.

3) With the pipe attached to the stove, slide the stove into its correct location, and mark the wall for a 10" x 10" (inside dimensions) square hole. The center of the square hole should line up with the centerline of the horizontal pipe. Cut and frame the 10 inch square hole in the exterior wall where the vent will be terminated. If the wall being penetrated is constructed of non-combustible material, i.e. masonry block or concrete, a 7" diameter hole is acceptable.

Note:

a) The horizontal run of vent should have a 1/4 inch rise for every 1 foot of run towards the termination. Never allow the vent to run downward. This could cause high temperatures and may present the possibility of a fire.

b) The location of the horizontal vent termination on an exterior wall must meet all local and national building codes, and must not be blocked or obstructed. For External Vent Terminal Locations, see diagram on page 10.

4) If installing the vent termination to a wall with vinyl siding, the Vinyl Siding Standoff must be used. Attach the Vinyl Siding Standoff to the Horizontal Vent Termination, but first run a bead of non-hardening mastic around its outside edges, so as to make a seal between vent cap and the standoff. Install the Vinyl Siding Standoff (Part # 950) between the vent cap and the exterior wall and attach with the four wood screws provided. Seal around the Vinyl Siding Standoff on all four sides. Diagram 2. **The arrow on the vent cap should be pointing up.** Insure that the 1-1/4" clearances to combustible materials are maintained. See diagram 2.

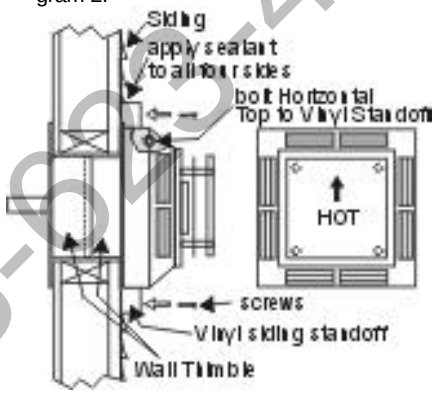

Diagram 2

Note: If installing termination on a siding covered wall, a vinyl siding standoff or furring strips must be used to ensure that the termination is not recessed into the siding. The four wood screws provided should be replaced with appropriate fasteners for stucco, brick, concrete, or other types of sidings.

5) Before connecting the horizontal run of vent pipe to the vent termination, slide the black decorative wall thimble cover over the vent pipe, then slide the Wall Thimble (Part # 942) over the vent pipe.

6) Slide the appliance and vent assembly towards the wall carefully inserting the vent pipe into the vent cap assembly. It is important that the vent pipe extends into the vent cap a sufficient distance so as to result in a minimum pipe overlap of 1-1/4 inches.

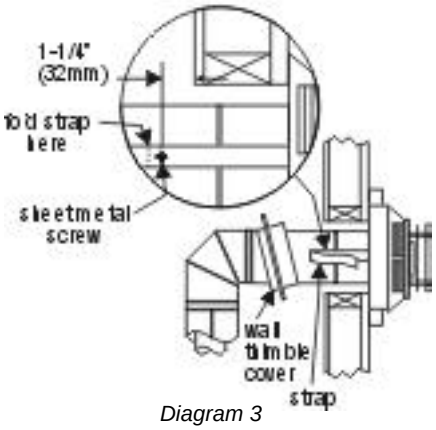

Diagram 3

CozyCabin.com 518-623-4349

Secure the connection between the vent pipe and the vent cap by attaching the two sheet metal strips extending from the vent cap assembly into the outer wall of the vent pipe. Use the two sheet metal screws provided to connect the strips to the pipe. Bend any remaining portion of the sheet metal strip back towards the vent cap, so it will be concealed by the decorative wall thimble cover. See diagram 3.

7) Install wall thimble in the center of the 10" square and attach with wood screws.

8) Slide the decorative wall thimble up to the wall surface being careful not to scratch the paint and attach with screws provided. Apply decorative brass or chrome trim if desired. See diagram 4.

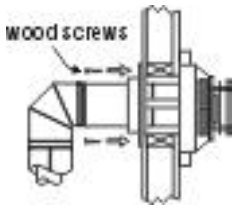

Diagram 4

DURA-VENT VERTICAL TERMINATION

1) Maintain the 1-1/4" clearances (air spaces) to combustibles when passing through ceilings, walls, roofs, enclosures, attic rafter, or other nearby combustible surfaces. Do not pack air spaces with insulation. Check page 16 for the maximum vertical rise of the venting system and the maximum horizontal offset limitations.

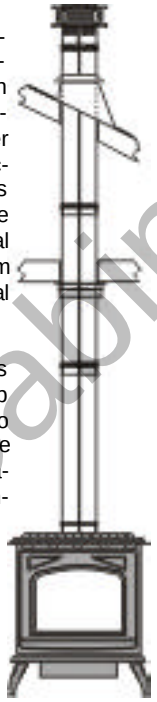

Diagram 5

2) Set the gas appliance in its desired location. Drop a plumb bob down from the ceiling to the position of the appliance flue exit, and mark the location where the vent will penetrate the ceiling. Drill a small hole at his point. Next, drop a plumb bob from the roof to the hole previously drilled in the ceiling, and mark the spot where the vent will penetrate the roof. Determine if ceiling joists, roof rafters or other framing will obstruct the venting system. You may wish to relocate the appliance or to offset, as shown in diagram 6 to avoid cutting load bearing members.

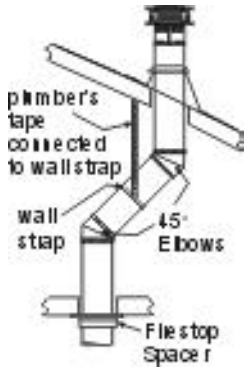

Diagram 6

3) To install the Round Support Box/Wall Thimble in a flat ceiling, cut a 10 inch square hole in the ceiling centred on the hole drilled in Step 2. Frame the hole as shown in diagram 7.

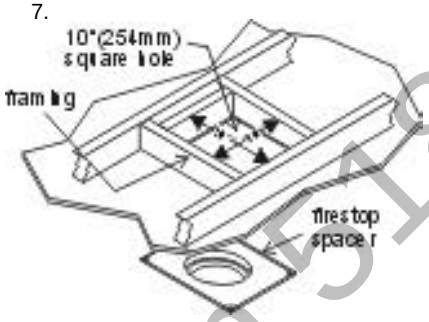

Diagram 7

4) Assemble the desired lengths of black pipe and elbows necessary to reach from the appliance adapter up though the Round Support Box. Insure that all pipes and elbow connections are in the fully twist-locked position and sealed.

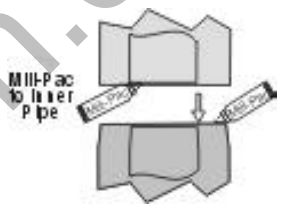

Note: Apply sealant "Mill-Pac" to inner pipe and high temp silicone sealant or "Mill-Pac" to outer pipe on every joint.

5) Cut a hole in the roof centred on the small drilled hole placed in the roof in Step 2. The hole should be of sufficient size to meet the minimum requirements for clearance to combustibles of 1-1/4". Slip the flashing under the shingles (shingles should overlap half the flashing) as per diagram 8.

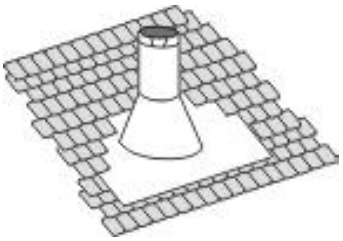

Diagram 8: The upper half of the flashing is installed under the roofing material and not nailed down until the chimney is installed. This allows for small adjustments.

6) Continue to assemble pipe lengths.

Note: If an offset is necessary in the attic to avoid obstructions, it is important to support the vent pipe every 3 feet, to avoid excessive stress on the elbows, and possible separation. Wall straps are available for this purpose. See diagram 4.

Galvanized pipe and elbows may be utilized in the attic as well as above the roofline. The galvanized finish is desirable above the roofline due to its higher corrosion resistance.

Continue to add pipe sections through the flashing until the height of the vent cap meets the minimum height requirements specified in diagram 9 or local codes. Note that for steep roof pitches, the vertical height must be increased. A poor draft, or down drafting can result from high wind conditions near big trees or adjoining roof lines, in these cases, increasing the vent height may solve the problem.

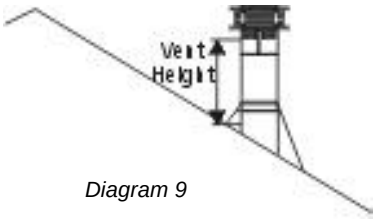

Diagram 9

Roof Pitch	Minimum Vent Height	
	Feet	Meters
flat to 7/12	2	0.61
over 7/12 to 8/12	2	0.61
over 8/12 to 9/12	2	0.61
over 9/12 to 10/12	2.5	0.76
over 10/12 to 11/12	3.25	0.99
over 11/12 to 12/12	4	1.22
over 12/12 to 14/12	5	1.52
over 14/12 to 16/12	6	1.83
over 16/12 to 18/12	7	2.13
over 18/12 to 20/12	7.5	2.29
over 20/12 to 21/12	8	2.44

7) Ensure vent is vertical and secure the base of the flashing to the roof with roofing rails, slide storm collar over the pipe section and seal with a mastic.

8) Install the vertical termination cap by twist locking it.

Notes:

a) For multistorey vertical installations, a Ceiling Fire stop (Part # 963) is required at the second floor, and any subsequent floor. Diagram 10. The opening should be framed to 10 " x 10" inside dimensions, in the same manner as shown in diagram 7.

Cozycabin.com 518-623-1349

b) Any occupied areas above the first floor, including closets and storage spaces, through which the vertical vent passes, must be enclosed.

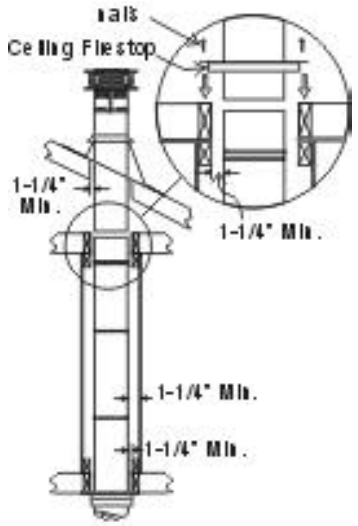

Diagram 10

Offset Chart

GS 6"(152mm) Nominal Diameter ID					
Offset		Pipe Length (L)		Height	
Inches	mm	Inches	mm	Inches	mm
4 3/4	121	0	0	13 1/4	337
9	229	6	152	17 1/2	445
11 1/4	286	9	229	19 1/2	495
13 1/4	337	12	305	21 3/4	552
21 3/4	552	24	610	30 1/4	768
30 1/4	768	36	914	39	991
38	965	48	1219	47	1194

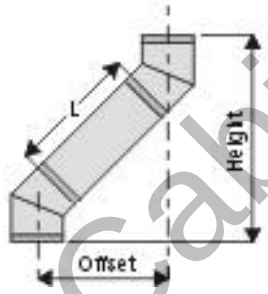

CATHEDRAL CEILINGS

Round Support (RDS) & Square Support (SQS)

If your home has a cathedral ceiling (no attic space between the ceiling and the roof), install the chimney and support as follows.

1) Situate the chimney in a convenient location as near as possible to the appliance outlet. Cut and frame a hole in the roof for the support. The sides of this hole must be vertical with 1 1/4" clearance.

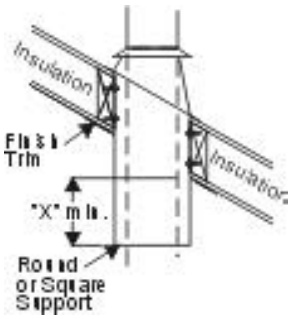

Slope	"X"
0/12 - 2/12	4"
2/12 - 7/12	5-1/2"
7/12 - 12/12	6-3/4"
12/12 - 24/12	7-1/2"
24/12+	12-1/2"

2) Place the support in the opening. Lower it to the correct height as determined by the table and diagram below.

Using a level, make sure the support is vertical. If the support extends above the roof, cut it flush with the top of the roof. Nail the support to the frame opening using (8) 3" spiral nails or #8 x 1-1/2" screws.

Note: If you are using a 6" square support you may find it difficult to screw it in place because it is fairly small inside.

Simpson Dura-Vent has provided angle brackets with this support which can be screwed to the outside of the support box and nailed to surrounding framing as required. Use a minimum of four #8 x 1/2" screws per bracket. In some cases these brackets may need to be trimmed (e.g.: to fit under a flashing). Place the Finish Collar around the support and fasten it to the ceiling using the screws provided.

3) Use appropriate roof flashing. Place the flashing under the upper shingles and on top of the lower shingles approximately half of the flashing should be under the shingles.

4) Assemble the desired lengths of Black Pipe and Elbows necessary to reach from the appliance adapter up through the support box and flashing to proper height as per Dia. 12, local codes or page 16. Ensure that all pipe and elbow connections are in their fully twist lock position.

5) Ensure vent is vertical and secure flashing to the roof with roofing nails. Slide the storm collar over the pipe section and seal with a mastic.

6) Twist lock the vent cap on to the last section.

Support Extensions - Round (RDSE) or Square (SQSE)

Steep pitched cathedral ceilings may require the use of a support extension. This piece fits down inside the support and can be adjusted to increase the support's length by up to 22". The extension is attached to the support using the eight metal screws provided. Be sure there is at least a 2 inch overlap where the extension joins the support.

CONVERTING A CLASS-A METAL CHIMNEY OR MASONRY CHIMNEY TO A DIRECT VENT SYSTEM

General

There are two different types of direct vent conversion systems listed below. Follow the appropriate directions for your installation.

A) Through an existing factory built metal chimney going through the ceiling: A typical conversion of this type is shown in diagram 1. The concept of direct vent conversion is to connect an adaptor to an Underwriters Laboratories (UL) listed 4 inch diameter aluminum flex pipe which is then passed down through the center of the existing metal chimney system. Three sizes of Top Adaptors are available from Simpson Dura-Vent. The Retro Connector (909B) is attached to the bottom of the flex pipe. The Top Adaptor and the Retro Connector are attached to the existing chimney with sheet metal screws. The appliance is then connected to the chimney with appropriate black direct vent pipe and an adjustable length section.

B) Through the wall of an existing masonry chimney: A typical conversion of an existing masonry chimney is shown in Diagram 6. A Top Adaptor (985K) and Flashing are used at the top of the masonry chimney. The 4 inch aluminum liner is connected to the adaptor and is passed down the chimney and out through the masonry wall and attached to the Retro Connector (909B). The Retro Connector is attached to the masonry wall and then connected to the direct vent pipe leading to the appliance.

Prior to installation and connection of the vent system to a factory-built or masonry chimney, the chimney must be inspected and thoroughly cleaned by a qualified service person, such as a certified chimney sweep or home inspection service.

CozyCabin.com 518-623-4319

The direct vent system must not be connected to a damaged factory-built or masonry chimney.

For factory built, zero clearance, and masonry chimneys cleanout doors and caps or plugs for cleanout tee fittings and ash dumps shall be secured in place and sealed before installing a Direct Vent system within the chimney.

If the appliance shuts off during operation, contact a qualified service person to determine if a negative pressure and/or leaky chimney condition exists. Do not operate the appliance until the problem is corrected.

Approved for US Installations Only

The use of an existing chimney as an air intake is not covered under the ANSI Z21.88b-1999, CSA 2.33b-M99 test methods and the resulting ITS/WHI product certification. The code Authority Having Jurisdiction must be consulted prior to proceeding with this installation method.

Converting a Factory Built Metal Chimney

1) Remove the existing chimney cap.

2) Measure the distance from the top end of the chimney to the bottom of the ceiling support box, add 3" (76mm) to this measurement, and cut a section of the 4" flex pipe to that length (the flex should already be extended to its nominal length).

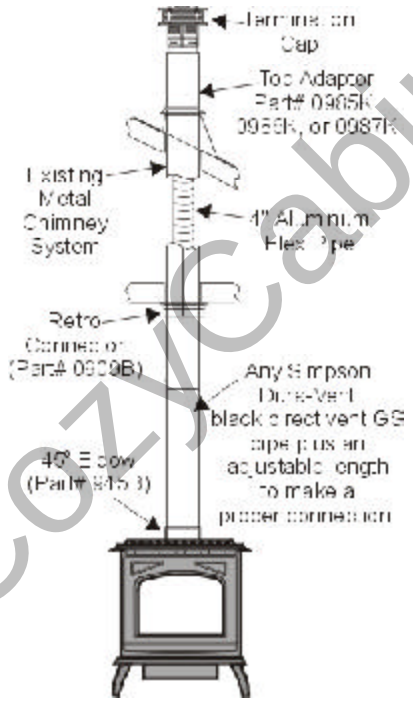

Diagram 1

3) Connect the end of the flex pipe section to the underside of the Top Adaptor using 3 sheet metal screws. Diagram 2.

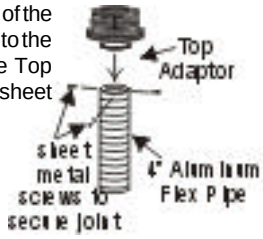

Diagram 2

4) Pass the flex pipe down through the center of the chimney system, and center the adaptor on the top of the chimney pipe. Drill four 1/8" diameter holes through the adaptor and into the chimney top. Insure that you are in fact, drilling into the metal on the chimney. Twist-lock the Termination Cap (Part# 980 or 991) onto the Adaptor. (Diagram 3 and 4).

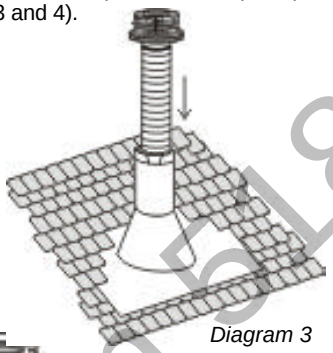

Diagram 3

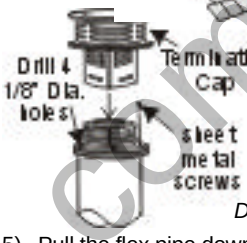

Diagram 4

5) Pull the flex pipe down through the ceiling support box, until it protrudes approximately 3" (76mm). Connect the flex pipe to the Retro Connector by slipping it into the 4-3/4" diameter sleeve on the top side of the Connector. Use 3 sheet metal screws to assemble these two parts.

6) Push the flex pipe back up into the ceiling support box, center the Retro Connector, and attach it to the support box, or decorative sleeve for double wall solid packed pipe, with the sheet metal screws (supplied). The holes in the Retro Connector are pre-punched. Diagram 5.

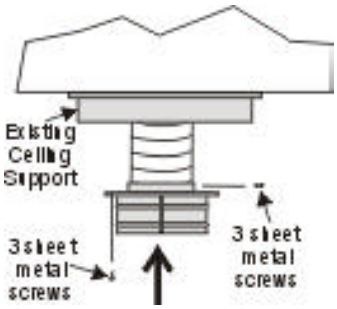

Diagram 5

7) The connection between the appliance and the Retro Connector may be completed with sections of black direct vent pipe, together with an adjustable length.

Converting a Masonry Chimney

Important: The existing masonry flue opening needs to have an area of at least a 36 sq. in. to insure proper intake/exhaust flow.

1) Before cutting any holes, assemble the desired sections of black direct vent pipe to determine the center of the masonry penetration.

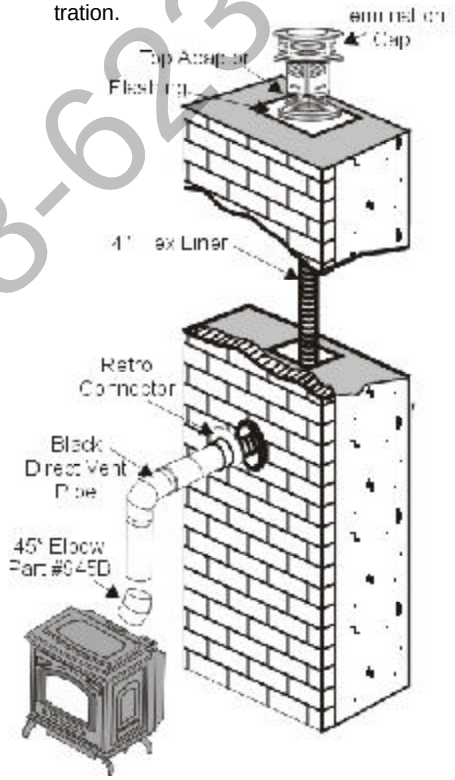

Diagram 6

2) Once the center point of the penetration has been determined, cut a 6" (152mm) dia. hole in the masonry. Be careful, if the hole is too large, the Retro Connector might not mount properly, and if the hole is too small, then the appliance might starve for intake air. If there is a frame wall in front of the masonry wall, cut and frame a 10" (254mm) clear square opening in the wall (centered around the 6" (152mm) masonry opening). IF there is sheet rock only (no studs) in front of the masonry, the 10" (254mm) clear opening is still needed, but does not need to be framed. This allows the Retro Connector to mount directly on the masonry and provide clearance to the combustibles. Diagram 11.

3) Secure the Flashing (Part # 705C) to the top of the masonry chimney using a bead of non-hardening sealant-adhesive. If the Flashing is larger than the top of the chimney, then cut and fold flashing as needed to fit chimney. Diagram 7.

CozyCabin.com 518-623-4349

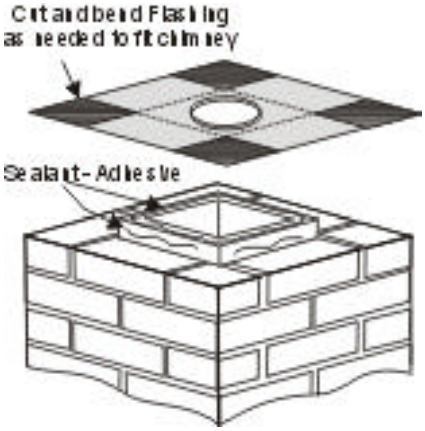

Diagram 7

4) To determine the length of flex required, measure from 3" (76mm) above the top of the Flashing down to the level of the opening. Add to this measurement the distance from the center of the chimney to out through the wall. Cut a piece of 4" flex to this length (the flex should already be extended to its nominal length).

5) Connect the 4" flex liner to the Top Adaptor (Part # 985K) using 3 sheet metal screws. Diagram 2.

6) Feed the 4" flex liner through the Flashing into the chimney. Continue to feed the liner out through the opening in the masonry wall.

7) Secure the Top Adaptor to the Flashing. Use 3 sheet metal screws through the side of the adaptor into the flange on the Flashing (diagram 8). Twist lock the Termination Cap (Part # 980 or 991) on to the Top Adaptor.

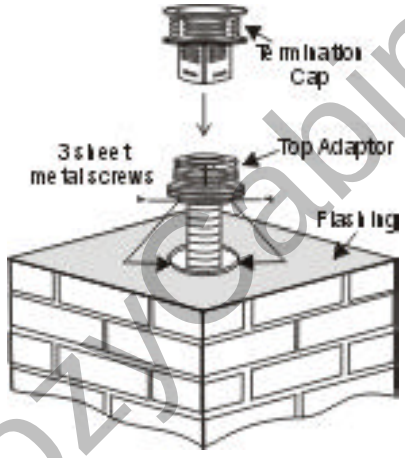

Diagram 8

8) Attach the flex to the Retro Connector. Use 3 sheet metal screws to attach the flex liner to the Connector. Diagram 9. Mount the Retro Connector to the masonry wall using masonry bolts. Re-drill larger holes on connector as needed. Be careful to insure that the connector is centered in the opening and the mounting holes line up with the masonry wall.

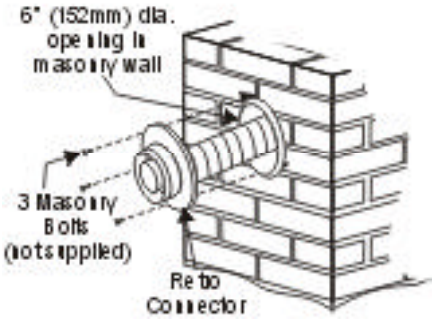

Diagram 9

9) Slide the Wall Thimble Cover (Part # 940) over the Retro Connector and secure with masonry bolts. Diagram 10. If you have a framed wall in front of the masonry, use wood screws to mount the Wall Thimble Cover to the framed wall, over the Retro Connector and the 10" (254mm) square framed opening. Diagram 11. If needed, add a section of direct vent pipe to the Retro Connector in order to extend through the opening in the Wall Thimble Cover.

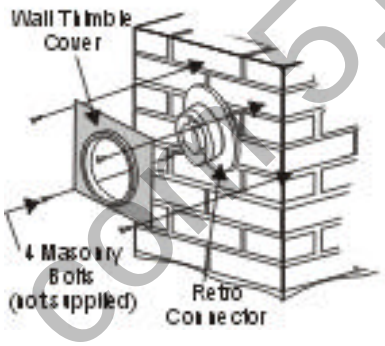

Diagram 10

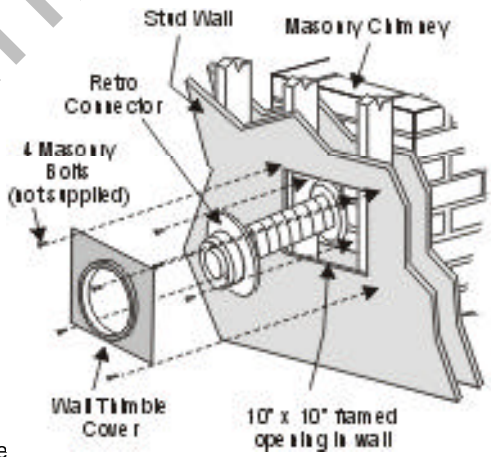

Diagram 11

10) The connection between the appliance and the Retro Connector may be completed with a section of black direct vent pipe, together with an adjustable length pipe section.

HIGH ELEVATION

This unit is approved in Canada for altitude to 4500 ft. (CAN/CGA-2.17-M91) with the resized orifice. For Natural Gas installations above 4500 ft. follow current CAN/CGA-B149.1.

In U.S.A., for installations above 2000 ft. refer to current ANSI Z223.1 Sc8-8.1.2a appendix F, for resizing orifice.

System Data - TARA T25		
For 0 to 4500 feet altitude Burner Inlet Orifice Sizes:		
	Natural Gas	Propane
Burner	#41	#53
Max. Input Rating		
- Natural Gas	25,000 Btu/h	
- Propane	25,000 Btu/h	
Min. Input Rating		
- Natural Gas	15,000 Btu/h	
- Propane	13,000 Btu/h	
Output Capacity		
Natural Gas	18,875 Btu/h	
Propane	19,250 Btu/h	
Supply Pressure		
Natural Gas	min.	5.0" w.c.
Propane	min.	12.0" w.c.
Manifold Pressure		
Natural Gas	3.8"	+/- 0.2" w.c.
Propane	11"	+/- 0.2" w.c.

Cozycabin.com 518-622-4349

GAS CONNECTION

The gas connection is a 3/8" NPT 90° elbow. The gas line can be rigid pipe or to make installation easier, use a listed flexible connector and/or copper tubing if allowed by local codes. Since some municipalities have additional local codes it is always best to consult with your local authorities and the CAN/CGA B149 installation codes.

For USA installations follow local codes and/or the current National Fuel Gas Code, ANSI Z223.1.

The gas control valve is under the unit, behind the drop down door and control panel. The gas inlet is located on the left side of the unit (viewed from the front). The inlet fitting is a 3/8" male flare.

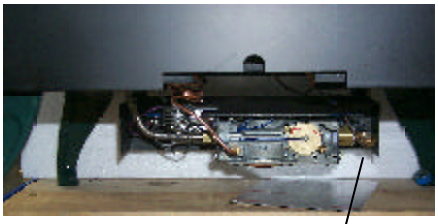

Valve Assembly: View from the rear — *Gas Inlet*

When using copper or flex connectors use only approved fittings. Always provide a union so that gas lines can be easily disconnected for burner and/or valve servicing. Flare nuts for copper lines and flex connectors are usually considered to meet this requirement.

Important: Always check for gas leaks with a soap and water solution or gas leak detector. Do not use open flame for leak testing.

Note: Prior to any pressure testing of the gas supply piping system that exceeds test pressures of 1/2 psig, this appliance must be disconnected from the piping system. If test pressures equal to or less than 1/2 psig are used then this appliance must be isolated from the piping system by closing its individual manual shut-off valve during the testing.

Recommended Gas Pipe Diameter

Pipe Length (feet)	Schedule 40 Pipe Inside Diameter		Tubing, Type L Outside Diameter	
	NG	LP	NG	LP
0 - 10	1/2" 1.3cm	3/8" 1.0cm	1/2" 1.3cm	3/8" 1.0cm
10 - 40	1/2" 1.3cm	1/2" 1.3cm	5/8" 1.6cm	1/2" 1.3cm
40 - 100	1/2" 1.3cm	1/2" 1.3cm	3/4" 2.0cm	1/2" 1.3cm
100 - 150	3/4" 2.0cm	1/2" 1.3cm	7/8" 2.3cm	3/4" 2.0cm

Note: Never use plastic pipe. Check to confirm whether your local codes allow copper tubing or galvanized pipe.

GAS PIPE PRESSURE TESTING

The appliance must be isolated from the gas supply piping system by closing its individual manual shut-off valve during any pressure testing of the gas supply piping system at test pressures equal to or less than 1/2 psig. (3.45 kPa). Disconnect piping from valve at pressures over 1/2 psig. The manifold pressure is controlled by a regulator built into the gas control, and should be checked at the pressure test point.

Note: To properly check gas pressure, both inlet and manifold pressures should be checked using the valve pressure ports on the valve.

1) Make sure the valve is in the "OFF" position.

2) Loosen the "IN" and/or "OUT" pressure tap(s), turning counterclockwise with a 1/8" wide flat screwdriver.

3) Attach manometer to "IN" and/or "OUT" pressure tap(s) using a 5/16" ID hose.

4) Light the pilot and turn the valve to "ON" position. Read manometer.

5) The pressure check should be carried out with the unit burning and the setting should be within the limits specified on the safety label.

6) When finished reading manometer, turn off the gas valve, disconnect the hose and tighten the screw (clockwise) with a 1/8" flat screwdriver. ***Note: Screw should be snug, but do not over tighten***

Valve Description

1) Gas cock knob
2) Manual high/low adjustment
3) Pilot Adjustment
4) Thermocouple Connection
5) Main Operator
6) Outlet Pressure Tap (Manifold Pressure)
7) Inlet Pressure Tap (Supply Pressure)
8) Pilot Outlet
9) Main Gas Outlet
10) Flange Securing Screw Holes
11) Alternative TC Connection Point
12) Thermoelectric Unit
13) Additional Valve Mounting Hole

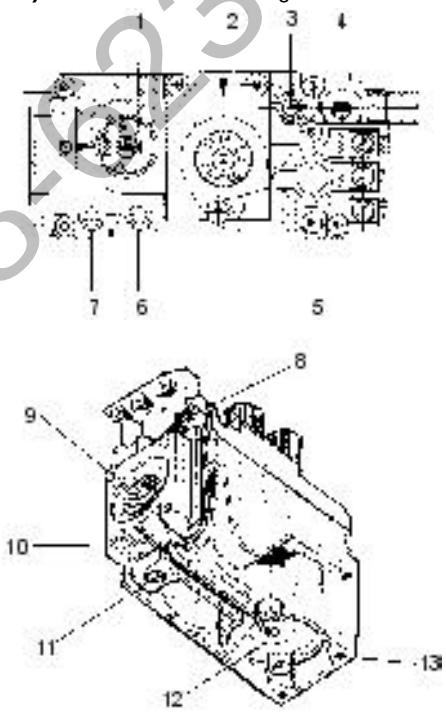

CONVERSION KIT FROM NATURAL GAS TO PROPANE

Kit: #290-969 for TARA Gas Stove using SIT 820 NOVA Gas Valve

THIS CONVERSION MUST BE DONE BY A QUALIFIED GAS FITTER. IF IN DOUBT DO NOT DO THIS CONVERSION !!

Conversion Kit Contains:

1	910-018	SIT Conversion Kit-50% Turndown LP
1	910-037	SIT LP Pilot Orifice
1	904-345	Rear Burner Orifice #53
1	908-255	Decal "Converted to Propane"
1	908-528	Red "PROPANE" label
1	908-529	5/32 Allen Key
1	908-797	Instruction Sheet

CozyCabin.com 518-623-4349

NOTE: If the conversion to Propane is being made at the time of installation, the valve may be removed to make it more accessible.

1) Shut off the gas supply.

2) Remove the Cast Iron Front Panel. Hold the cast iron front panel at the bottom and lift upwards and out from the stove. Once free of the locating tabs, the panel can be dropped down; freeing it from the top of the stove.

   Place the cast iron front panel on a non-abrasive surface, away from any traffic to ensure that it does not get damaged.

3) Remove the Front Glass Panel. Using a 7/16" socket wrench, remove the 6hex head bolts used to secure the glass panel and frame to the stove. Remove the frame and glass panel and set it aside.

4) Remove the logs.

5) Remove the burner tube by removing the locking screw on the rear burner support bracket and then lift the burner out.

6) Using a 1/2" deep socket remove the burner orifice and install new front burner orifice LP stamped #53 and tighten.

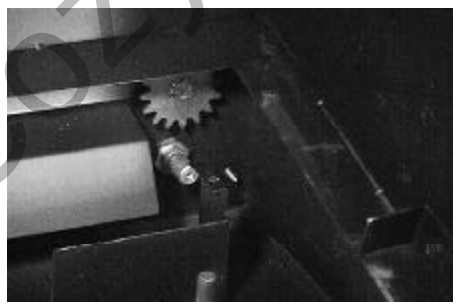

7) Pull off the pilot cap to expose the pilot orifice.

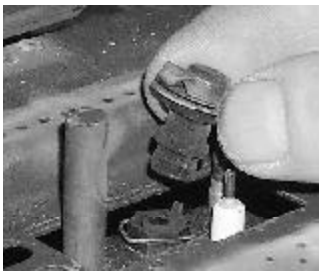

8) Unscrew the pilot orifice with the allen key and replace with the LP pilot orifice in the kit.

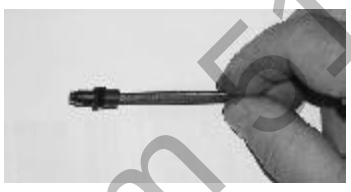

9) Replace the burner. Place the burner onto the support bracket and guide the front of the burner onto the burner injector. The burner air shutter gears must be aligned. Check to make sure that the two gears engage each other by at least two-thirds of their thickness. If not, it will be necessary to disengage the burner and screw the drive gear in and out as required. Once everything is aligned properly, secure the burner with the locking screw.

10) Re-install the logs, front glass panel and cast iron door front.

11) Remove and discard the 3 pressure regulator mounting screws (A), pressure regulator tower (B) and diaphragm (C).

12) Insure that the rubber gasket (D) is properly positioned and install the new HI/LO pressure regulator assembly to the valve using the new screws (E) supplied with the kit. Tighten screws securely.

13) Attach clear label "This unit has been converted to Propane" on the serial # decal.

14) Replace yellow "Natural Gas" label with red "Propane" label.

15) Take the Decal with the Propane Orifice #, Manifold Pressure, Input, etc. and attach to the stove's rear heat shield to indicate that the unit has been converted to burn propane.

16) Check for gas leaks.

17) Check inlet and outlet pressures.

18) Check operation of flame control.

19) Check for proper flame appearance and glow on logs.

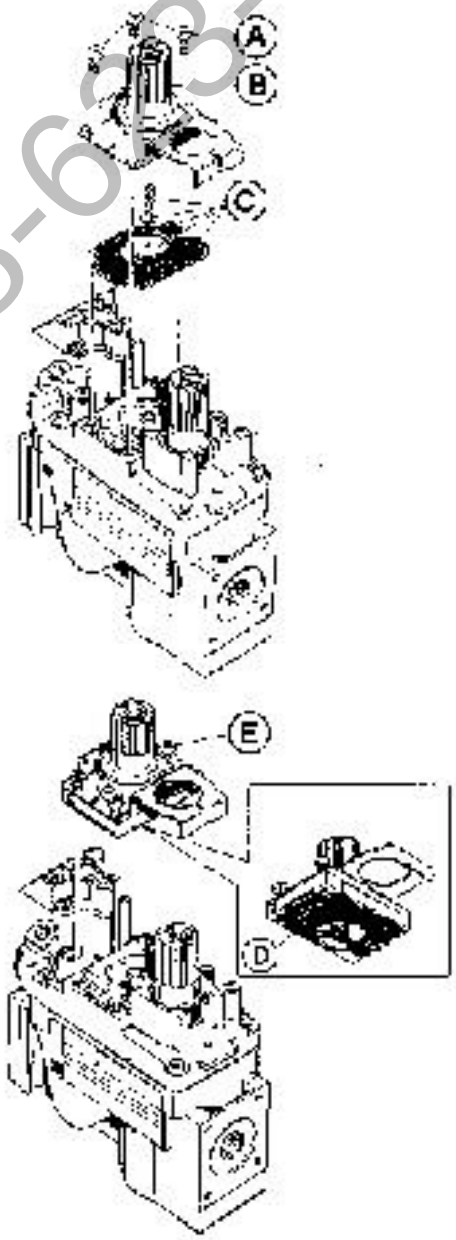

Cozycom.com 518-623-4349

AERATION ADJUSTMENT

The burner aeration is factory set but may need adjusting due to either the local gas supply, air supply or altitude. The flames should not extend to the top of the firebox and excessive soot should not be present. The air shutter and the flue restrictor setting will both affect the flame pattern.

Natural Gas: 1/4" (7mm) open
Propane: wide open

1) Remove the Front Cast Iron Panel and Glass Panel, see instructions on page 26.

2) Remove the complete log set. (See Log Installation instructions on page 27).

3) Using a 1/4" nut driver or flat screwdriver, loosen the locking screw on the burner air shutter.

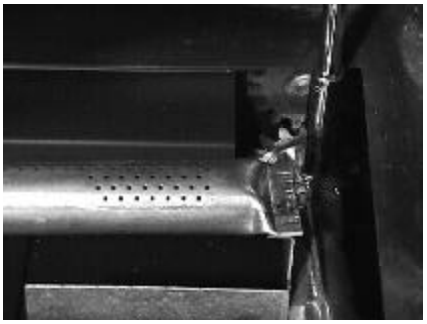

4) Replace the log set, and glass panel.

5) Insert a 3/16" Allen wrench into the adjusting key (through) the hole on the rear panel of the stove).

6) Turn the mechanism until to change the flame pattern. Turning clockwise will diminish the flame, and turning counter-clockwise will increase the flame. The rear flame must not extend and touch the top of the firebox and no soot should be forming on any surfaces.

7) Remove the glass panel, and the log set.

8) Using the 1/4" nut driver or flat screwdriver, tighten the locking screw on the burner air shutter.

9) Replace the log set, glass panel and Cast Iron Front Panel.

Caution: Carbon will be produced if the air shutter is closed too much.

Note: Any damage due to carboning resulting from improperly setting the aeration controls is NOT covered under warranty.

Note: Aeration Adjustment should only be performed by an authorized Regency Installer at the time of installation or service.

REMOVING THE CAST IRON FRONT PANEL

1) Hold the cast iron front panel at the bottom and lift upwards and out from the stove. Once free of the locating tabs, the panel can be dropped down; freeing it from the top of the stove.

   Place the cast iron front panel on a non-abrasive surface, away from any traffic to ensure that it does not get damaged.

2) Remove the Front Glass Panel. Using a 7/16" socket wrench, remove the 6 hex head bolts used to secure the glass panel and frame to the stove. Remove the frame and glass panel and set it aside.

Securing the Cast Iron Front Panel

1) Catch the panel in the viewing area and on the bottom edge.

2) Place the front panel against the stove just below the top panel.

3) Slide the panel upwards under the top panel. When the top is in position, push the bottom edge into position. Push downwards to secure the locating pins in the locating tabs.

OPTIONAL FRONT GRILL

1) Remove the Cast Iron Front Panel. Catch the cast iron front panel at the bottom and lift upwards and out from the stove. Once free of the locating tabs, the panel can be dropped down; freeing it from the top of the stove.

   Place the cast iron front panel on a non-abrasive surface, away from any traffic to ensure that it does not get damaged.

2) Lay the grill into position on the inside of the Cast Iron Front Panel and secure using the 2 screws provided.

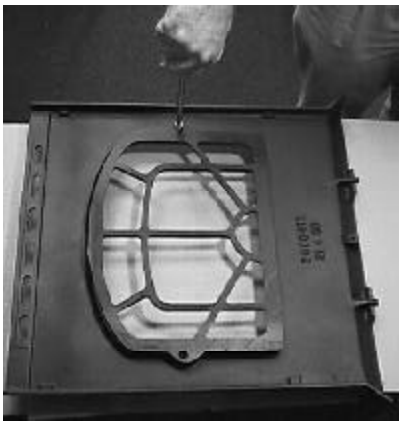

CozyCabin.com 518-623-2849

OPTIONAL SIDE SHELF

Contents:
Qty.
1 Side Shelf
2 Side Shelf Bracket
4 Screws (1/4" x 1/2")

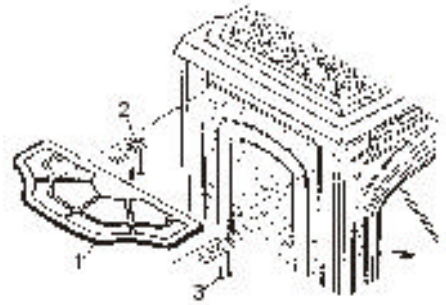

1) Screw the 2 side shelf brackets to the underside of the stove hob. Diagram 1.

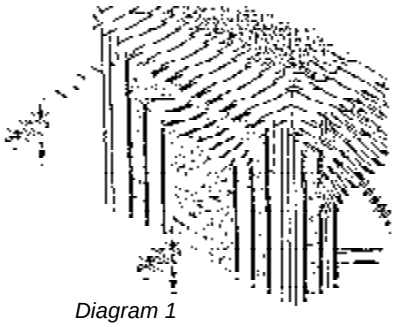

Diagram 1

2) Place the side shelf onto the 2 brackets and secure with 2 screws. Diagram 2.

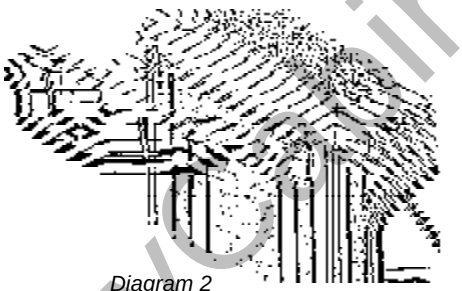

Diagram 2

3) Align the side shelf so that it is centered on the hob making sure not to damage the enamel finish. Once aligned, tighten all screws. Diagram 3.

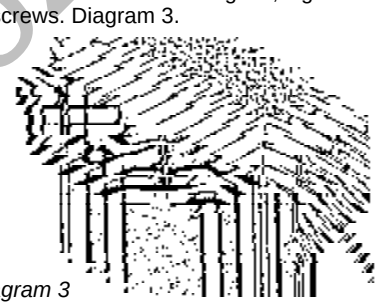

Diagram 3

LOG INSTALLATION

WARNING: Dangerous operating conditions may occur if these logs are not positioned in their approved locations. Read the instructions below carefully and refer to the diagrams. If logs are broken do not use the unit until they are replaced. Broken logs can interfere with the pilot and burner operation.

There are 5 logs in the set: 1 Rear Log, 1 Front Log, 1 Middle Log and 2 Top Logs.

The logs are fragile, handle with care - **DO NOT FORCE** into position.

1) Remove the Cast Iron Front Panel (see page 26).

2) Remove the Front Glass Panel and frame (see page 26.)

3) Place the rear log on the 2 rear pins in the log support tray.

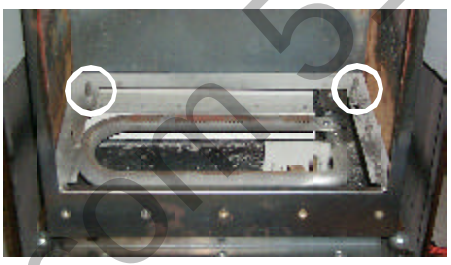

Note: Do not force logs down.

4) Place the front log on the log support tray. Ensure that it is pulled all the way to the front and towards the right side of the firebox.

5) Place the middle log on the 2 middle log pins.

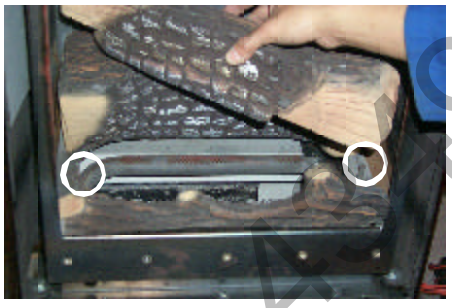

6) Place the 2 top logs in position on the middle and rear logs as shown below. Place the right log as close to the knot on the rear log as possible.

7) Replace the Front Glass Panel and frame and tighten the fixing bolts.

8) Replace the Cast Iron Front Panel.

OPTIONAL WALL THERMOSTAT

A wall thermostat may be installed if desired. Connect the wires as per the wiring diagrams. Note that the wires are connected to the "TH" on the gas valve. Use table on page 27 to determine the maximum wire length:

Note: Preferable if the thermostat is installed on an interior wall.

Waterford offers an optional programmable thermostat but any 250-750 millivolt rated non-anticipator type thermostat that is CSA, ULC or UL approved may be used.

CAUTION
Do not connect the millivolt wall thermostat wires to the 120V wires.

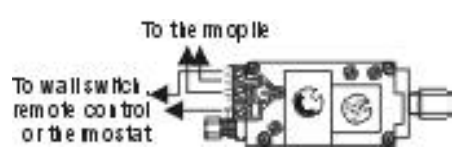

Cozycabin.com 518-293-4349

Thermostat Wire Table

Recommended Maximum Lead Length (Two-Wire) When Using Wall Thermostat (CP-2 System)	
Wire Size	Max. Length
14 GA.	50 Ft.
16 GA.	32 Ft.
18 GA.	20 Ft.
20 GA.	12 Ft.
22 GA.	9 Ft.

OPTIONAL REMOTE CONTROL

Use the Waterford Remote Control Kits approved for this unit. Use of other systems may void your warranty.

The remote control kit comes with a hand held transmitter, a receiver and a wall mounting plate.

1) Choose a convenient location on the wall to install the receiver and the receptacle box (protection from extreme heat is very important). Run wires from the fireplace to that location, use Thermostat Wire Table.

2) Connect the wires as per the wiring diagram below.

CAUTION
Do not connect the millivolt remote control wires to the 120V wires.

3) Install 3 AAA alkaline batteries in transmitter and 4 AA alkaline batteries in the receiver. Install the receiver and its cover in the wall. Switch the remote receiver to "remote" mode. The remote control is now ready for operation.

FINAL CHECK

Before leaving this unit with the customer, the installer must ensure that the appliance is firing correctly. This includes:

1) Clocking the appliance to ensure the correct firing rate (rate noted on label) at 15 minutes.

2) If required, adjusting the primary air to ensure that the flame does not carbon. First allow the unit to burn for 15 min. to stabilize.

3) Check for proper draft.

CAUTION

Any alteration to the product that causes sooting or carboning that results in damage to the exterior facia is not the responsibility of the manufacturer.

WIRING DIAGRAM - TARA

This heater does not require a 120V A.C. supply for operation. In case of a power failure, the burner switch and the optional remote control/thermostat will continue to operate. However, a 120V A.C. power supply is needed for the fan/blower operation. If any of the original wires as supplied with the appliance must be replaced, it must be replaced with CSA type SEW-2 (200°C) or its equivalent.

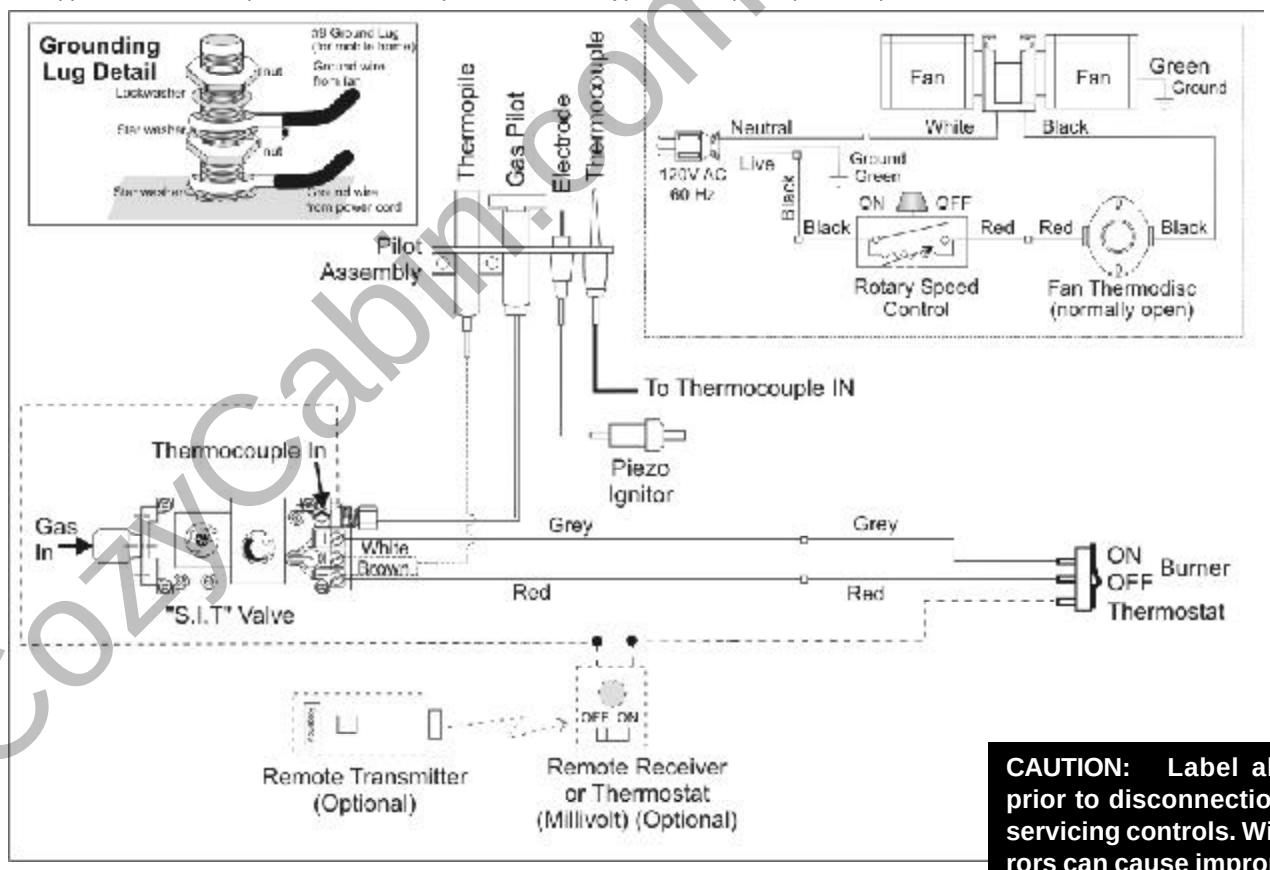

CAUTION: Label all wires prior to disconnection when servicing controls. Wiring errors can cause improper and dangerous operation.

Caution: Ensure that the wires do not touch any hot surfaces and are away from sharp edges.

CozyCabin.com 518-623-4349

OPERATING INSTRUCTIONS

1) Read and understand these instructions before operating this appliance.

2) Check to see that all wiring is correct and enclosed to prevent possible shock.

3) Check to ensure there are no gas leaks.

4) Make sure the glass in the door frame is properly positioned. Never operate the appliance with the glass removed. Never strike the glass or slam the door shut.

5) Verify that the venting and cap are unobstructed.

6) Verify log placement. If the pilot cannot be seen when lighting the unit - the logs have been incorrectly positioned.

7) The unit should never be turned off, and on again without a minimum of a 60 second wait.

LIGHTING PROCEDURE

IMPORTANT: Gas cock knob cannot be turned from "PILOT" to "OFF" unless it is partially depressed.

1) Turn stove OFF using the Burner "ON/OFF" switch remote or thermostat. Switches are located at the top right hand corner (rear) of the stove.

2) Turn gas control knob so indicator points to "OFF" position and allow 5 minutes for any gas in the combustion chamber to escape.

3) Turn gas control knob counterclockwise so indicator points to the "PILOT" position. Depress the gas control knob fully. Depress the igniter button several times until the pilot lights. After approximately one minute, release the gas control knob. The pilot flame should continue to burn. If the pilot does not remain lit, repeat operation allowing a longer period before releasing gas control knob.

4) When the pilot stays lit, turn the gas knob further counterclockwise to the "ON" position.

5) Use the thermostat or remote control to turn on the unit.

6) Rotate the flame height regulator to adjust the flame height higher or lower.

Operating Controls are located behind the bottom flip down panel.

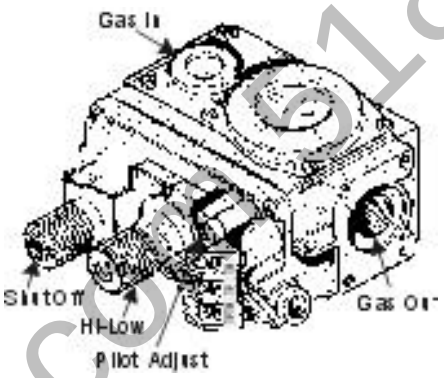

SHUTDOWN PROCEDURE

1) Use the thermostat or remote control to turn off the main burner.

2) Turn the main gas control clockwise to the "OFF" position to turn off the pilot (push knob in slightly).

3) Turn off all electric power to appliance if service is to be performed.

FIRST FIRE

The first fire in your stove is part of the paint curing process. To ensure that the paint is properly cured, it is recommended that you burn your fireplace for at least four (4) hours the first time you use it with the fan on.

When first operated, the unit will release an odour caused by the curing of the paint, the burning off of any oils remaining from manufacturing. Smoke detectors in the house may go off at this time. Open a few windows to ventilate the room for a couple of hours.

The glass panel may require cleaning after the unit has cooled down. **DO NOT ATTEMPT TO CLEAN THE GLASS WHILE IT IS HOT.**

DO NOT BURN THE APPLIANCE WITHOUT THE GLASS FRONT IN PLACE.

During the first few fires, a white film may develop on the glass front as part of the curing process. The glass should be cleaned or the film will bake on and become very difficult to remove. Use a non-abrasive cleaner and NEVER clean the glass while it is hot.

AUTOMATIC CONVECTION FAN OPERATION

The fan operates automatically - turn the knob at the top right rear corner to adjust to the desired speed. The fan will turn on as the stove comes up to operating temperature. After the unit has been turned off and the unit cooled to below a useful heat output range the fan will shut off automatically.

ADJUSTING FLAME HEIGHT

Your heater has an adjustable flame to tailor the look and heat output to your specific needs. It is adjusted by turning the flame adjustment dial on the gas control valve.

Turn counterclockwise to adjust the flame higher, clockwise for a lower flame.

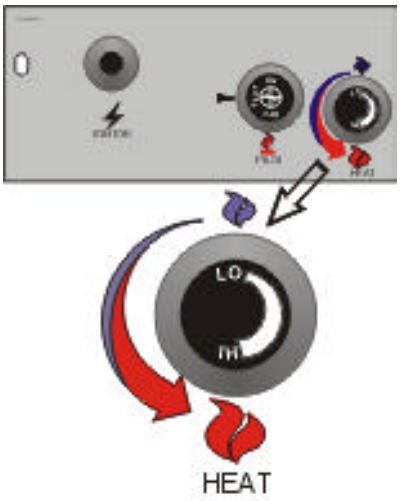

CozyCabin.com 518-622-4349

COPY OF THE LIGHTING PLATE INSTRUCTIONS

FOR YOUR SAFETY READ BEFORE LIGHTING

This appliance must be installed in accordance with local codes, if any; if none, follow the National Fuel Gas Code, ANSI Z223.1/NFPA 54, or Natural Gas and Propane Installation Codes, CSA B149.1. (Australia: AG601, New Zealand: NZS 5261)

WARNING: If you do not follow these instructions exactly, a fire or explosion may result causing property damage, personal injury or loss of life. Improper installation, adjustment, alteration, service or maintenance can cause injury or property damage. Refer to the owner's information manual provided with this appliance. For assistance or additional information consult a qualified installer, service agency or gas supplier.

A) This appliance has a pilot which must be lighted by hand. When lighting the pilot, follow these instructions exactly.

B) BEFORE LIGHTING smell all around the appliance area for gas. Be sure to smell next to the floor because some gas is heavier than air and will settle on the floor.

WHAT TO DO IF YOU SMELL GAS
- Do not try to light any appliance.
- Do not touch any electric switch, do not use any phone in your building.
- Immediately call your gas supplier from a neighbours phone. Follow the gas supplier's instructions.
- If you cannot reach your gas supplier, call the fire department.

C) Use only your hand to push in or turn the gas control knob. Never use tools. If the knob will not push in or turn by hand, don't try to repair it, call a qualified service technician. Force or attempted repair may result in a fire or explosion.

D) Do not use this appliance if any part has been under water. Immediately call a qualified service technician to inspect the appliance and to replace any part of the control system and any gas control which has been under water.

E) This appliance needs fresh air for safe operation and must be installed so there are provisions for adequate combustion and ventilation air.

CAUTION: Hot while in operation. Do not touch. Severe Burns may result. Due to high surface temperatures keep children, clothing and furniture, gasoline and other liquids having flammable vapors away. Keep burner and control compartment clean. See installation and operating instructions accompanying appliance.

LIGHTING INSTRUCTIONS

STOP! Read the safety information above on this label.

1) Push in gas control knob slightly and turn clockwise to "OFF". Knob cannot be turned from "PILOT" to "OFF" unless knob is pushed in slightly. Do not force.
2) Wait five (5) minutes to clear out any gas. If you then smell gas STOP! Follow step "B" in the Safety Information above on this label. If you don't smell gas, go to the next step.
3) Turn knob on gas control counterclockwise to "PILOT".
4) Push in control knob all the way and hold in. Continually push and release the black button on spark igniter until pilot lights. Continue to hold the control knob in for about 1/2 minute after the pilot is lit. Release knob and it will pop back up. Pilot should remain lit. If it goes out, repeat steps 1) to 4).
If knob does not pop up when released, stop and immediately call your service technician or gas supplier. If the pilot will not stay lit after several tries, turn the gas control knob to "OFF" and call your service technician or gas supplier.

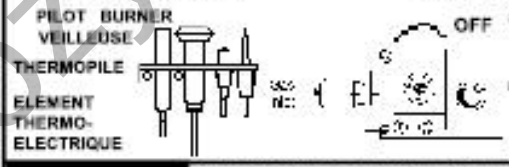

5) Turn gas control knob counterclock-wise to "ON".
6) Use rocker switch to operate main burner.

TO TURN OFF GAS APPLIANCE

You may shut off the pilot during prolonged non use periods to conserve fuel.

1) Push in the gas control knob slightly and turn clockwise to "OFF". Do not force.
2) Turn off all electric power to the appliance if service is to be performed.

DO NOT REMOVE THIS INSTRUCTION PLATE 908-017b

NORMAL OPERATING SOUNDS OF GAS APPLIANCES

It is possible that you will hear some sounds from your gas appliance. This is perfectly normal due to the fact that there are various gauges and types of steel used within your appliance. Listed below are some examples. All are **normal operating sounds** and should not be considered as defects in your appliance.

Blower:
Waterford gas appliances use high tech blowers to push heated air farther into the room. It is not unusual for the fan to make a "whirring" sound when ON. This sound will increase or decrease in volume depending on the speed setting of your fan speed control.

Burner Tray:
The burner tray is positioned directly under the burner tube(s) and logs and is made of a different gauge material from the rest of the firebox and body. Therefore, the varying thicknesses of steel will expand and contract at slightly different rates which can cause "ticking" and "cracking" sounds. You should also be aware that as there are temperature changes within the unit these sounds will likely re-occur. Again, this is normal for steel fireboxes.

Blower Thermodisc:
When this thermally activated switch turns ON it will create a small "clicking" sound. This is the switch contacts closing and is normal.

Pilot Flame:
While the pilot flame is on it can make a very slight "whisper" sound.

Gas Control Valve:
As the gas control valve turns ON and OFF, a dull clicking sound may be audible, this is normal operation of a gas regulator or valve.

Unit Body/Firebox:
Different types and thicknesses of steel will expand and contract at different rates resulting in some "cracking" and "ticking" sounds will be heard throughout the cycling process.

COZYCAJUN.COM 518-623-4549

MAINTENANCE INSTRUCTIONS

1) Always turn off the valve before cleaning. For relighting, refer to lighting instructions. Keep the burner and control compartment clean by brushing and vacuuming at least once a year. When cleaning the logs, use a soft clean paint brush as the logs are fragile and easily damaged.

2) Clean glass (never when unit is hot), appliance, and door with a damp cloth. Never use an abrasive cleaner.

The porcelain enamel finished stoves may be cleaned with ordinary household glass cleaner and a soft cloth or paper towel. Never clean when unit is hot and never use an abrasive cleaner.

3) The heater is finished in a porcelain finish or with a heat resistant paint and should only be refinished with heat resistant paint (not with wall paint). Waterford uses Stove-Bright Paint - Metallic Black #6309.

Never use an abrasive cleaner on the porcelain finish as it may scratch the surface.

4) Make a periodic check of burner for proper position and condition. Visually check the flame of the burner periodically, making sure the flames are steady; not lifting or floating. If there is a problem, call a qualified service person.

5) Caution: Label all wires prior to disconnection when servicing controls. Wiring errors can cause improper and dangerous operation.

6) The appliance and venting system must be inspected before use, and at least annually, by a qualified field service person, to ensure that the flow of combustion and ventilation air is not obstructed.
During the annual service call, the burners should be removed from the burner tray and cleaned. Replace the embers but do not block the pilot.

7) Keep the area near the appliance clear and free from combustible materials, gasoline, and other flammable vapours and liquids.

CAUTION: ANY SAFETY SCREEN OR GUARD REMOVED FOR SERVICING AN APPLIANCE MUST BE REPLACED PRIOR TO OPERATING THE APPLIANCE.

WARNING: CHILDREN AND ADULTS SHOULD BE ALERTED TO THE HAZARDS OF HIGH SURFACE TEMPERATURE AND SHOULD STAY AWAY TO AVOID BURNS OR CLOTHING IGNITION. YOUNG CHILDREN SHOULD BE CAREFULLY SUPERVISED WHEN THEY ARE IN THE SAME ROOM AS THE APPLIANCE.

DO NOT USE THIS APPLIANCE IF ANY PART HAS BEEN UNDER WATER. IMMEDIATELY CALL A QUALIFIED SERVICE TECHNICIAN TO INSPECT THE APPLIANCE AND TO REPLACE ANY PART OF CONTROL SYSTEM AND ANY GAS CONTROL WHICH HAS BEEN UNDER WATER.

CLOTHING OR OTHER FLAMMABLE MATERIAL SHOULD NOT BE PLACED ON OR NEAR THE APPLIANCE.

8) Each time the appliance is lit, it may cause condensation and fog the glass. This condensation and fog is normal and will disappear in a few minutes as the glass heats up.

Never operate the appliance without the glass properly secured in place or with the door open.

9) Periodically check the pilot flames. Correct flame pattern has three strong blue flames: 1 flowing around the thermopile and 1 around the thermocouple, and 1 flowing across the rear of the burner (it does not have to be touching the burner).

Note: If you have an incorrect flame pattern, contact your Waterford dealer for further instructions.

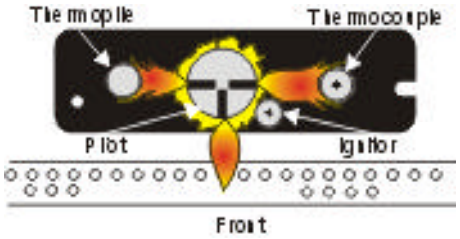

Top View of pilot flame

Incorrect flame pattern will have small, probably yellow flames, not coming into proper contact with the rear of the burner or thermopile.

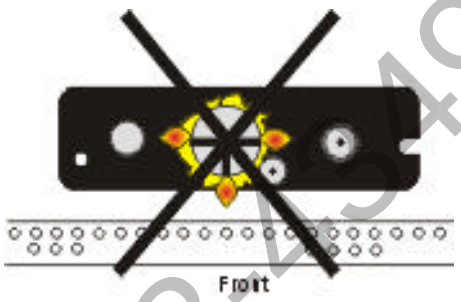

Top View of pilot flame

GENERAL VENT MAINTENANCE

Conduct an inspection of the venting system semi-annually. Recommended areas to inspect as follows:

1) Check the Venting System for corrosion in areas that are exposed to the elements. These will appear as rust spots or streaks, and in extreme cases, holes. These components should be replaced immediately.

2) Remove the Cap, and shine a flashlight down the Vent. Remove any bird nests, or other foreign material.

3) Check for evidences of excessive condensation, such as water droplets forming in the inner liner, and subsequently dripping out the joints, Continuous condensation can cause corrosion of caps, pipe, and fittings. It may be caused by having excessive lateral runs, too many elbows, and exterior portions of the system being exposed to cold weather.

4) Inspect joints, to verify that no pipe sections or fittings have been disturbed, and consequently loosened. Also check mechanical supports such as Wall Straps, or plumbers' tape for rigidity.

LOG REPLACEMENT

The unit should never be used with broken logs. Turn off the gas valve and allow the unit to cool before opening door to carefully remove the logs. The pilot light generates enough heat to burn someone. If for any reason a log should need replacement, you must use the proper replacement log. The position of these logs must be as shown in the diagram under Log Installation.

Note: Improper positioning of logs may create carbon build-up and will alter the unit's performance which is not covered under warranty.

CozyCabin.com 518-623-4349

GLASS REPLACEMENT

Your TARA stove is supplied with high temperature, 5 mm Neoceram ceramic glass that will withstand the highest heat that your unit will produce. In the event that you break your glass by impact, purchase your replacement door from an authorized Waterford dealer only, and follow our step-by-step instructions for replacement.

Replacement Part # W260040 Tara Glass

WARNING: Do not operate appliance with glass panels removed, cracked or broken. Replacement of the glass should be done by a licensed or qualified service person.

Note: Wearing gloves will protect your hands while handling glass.

1) Remove the cast iron front panel, grasp it at the bottom and lift the panel upwards and out from the stove. Once free of the locating tabs, the panel can be dropped down; freeing it from the top of the stove.

   Place the cast iron front panel on a non-abrasive surface, away from any traffic to ensure that it does not get damaged.

2) Remove the Front Glass Panel. Using a 7/16" socket wrench, remove the 6 hex head bolts used to secure the glass panel and frame to the stove. Remove the frame and glass panel.

3) Using a flat screwdriver, pry open the 4 retaining tabs holding the glass panel in place and remove the old glass.

4) Take the new glass and fit the 'tadpole' glass gasket around the edge of the glass.

5) Insert the glass (with gasket) in to the frame so that the 'bulb' portion of the gasket is exposed.

6) Using a flat screwdriver, close the 4 retaining tabs used to hold the glass in place.

7) Replace the Front Glass Panel on the stove and reinstall the Cast Iron Front Panel.

FAN MAINTENANCE

If your fan requires maintenance or replacement, access to the fan is through the rear access panel on the back of the unit. **NOTE: the unit MUST NOT be operated without the fan access panel securely in place and correctly sealed.**

IMPORTANT: These fans collect a lot of dust from within your home. Ensure you maintain these fan motors on a regular basis by vacuuming out the fan squirrel cages, around the motor, and around the grills on the back of the stove.

IMPORTANT
Disconnect power supply before servicing

WARNING:
Electrical Grounding Instructions
This appliance is equipped with a three pronged (grounding) plug for your protection against shock hazard and should be plugged directly into a properly grounded three-prong receptacle. Do not cut or remove the grounding prong from this plug.

To remove fan: Follow the installation instructions on page 7 in reverse.

VALVE MAINTENANCE

If your valve requires maintenance or replacement, use the following instructions.

Note: Always close off the gas supply before removing the valve.

1) If optional fan is installed, disconnect power source to stove.
2) Remove control panel.

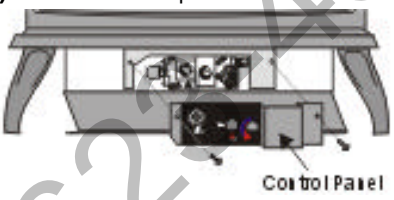

3) Disconnect gas line to stove.
4) Disconnect 3/8" NPT pipe from 90° elbow on valve.
5) Disconnect the two (2) switch wires from valve.

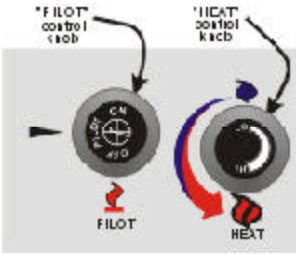

6) Disconnect piezo wire.
7) Remove the cast iron front panel for easier access.
8) Remove the 4 screws holding the gas valve assembly to the bracket.
9) Remove the thermopile wire.
10) Remove thermocouple with a 9 mm (metric) wrench.
11) Remove pilot nut with an 11 mm wrench.
12) Remove valve to orifice nut with a 13/16" wrench.
13) Remove inlet pipe with pipe wrench. Note orientation of 90° elbow.
14) Remove valve and remove gas out 90° brass fitting. Note orientation of fitting.

Installing Valve Assembly

1) To install a new valve assembly, reverse instructions for **removing valve**. See above.
2) Check for leaks and manifold pressure. See **Gas Pressure Test** instructions.

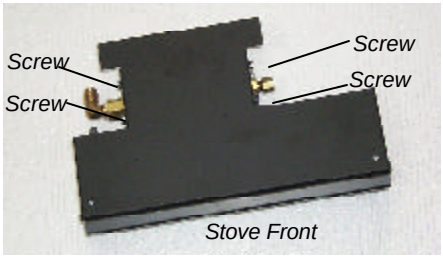

Valve Bracket with Valve - Top View

cozycabin.com 518-623-4349

REPLACEMENT / SPARE PARTS LIST

	Part #	Description
1)	W260021**	Front Casting (Black)
2)	280-022	Door
3)	W260040/P	Glass
4)	41225	Gasket for Glass
6)	904-012	Capscrew 1/4 x 1-3/4 NC
8)	260350	Gasket for Rear Relief Plate
9)	290-015	Rear Blow Off Plate
10)	280-020	Rear Panel
15)	260-037	Rear Control Panel
16)	910-241	Burner Switch
18)	*	Cable Tie Mount
19)	*	Cable Tie
20)	910-704	High Temperature Wire Harness - to Power
	908-106	Rear Control Panel Decal
21)	*	Gasket of Inner Flue Adapter
22)	W842051	Gasket of Flue Adapter
23)	W260090	Dura-Vent Collar
24)	*	Hob Shield
25)	W942081**	Hob Casting (Black)
30)	W260260	Top Relief Frame Gasket
31)	942-117	Top Relief Plate Frame
32)	W260280	Top Relief Plate Gasket
33)	290-021	Air Baffle Plate
41)	W260061**	Side Casting (Black)
42)	W420011**	Leg (Black)
43)	*	Stove Base
44)	290-917	Optional Fan Assembly Complete
	910-157/P	Fan Motor (120 V)
45)	910-142	Thermodisc Fan Auto (ON/OFF)
48)	910-330	Fan Speed Control (120 V)
49)	904-586	Fan Control Knob

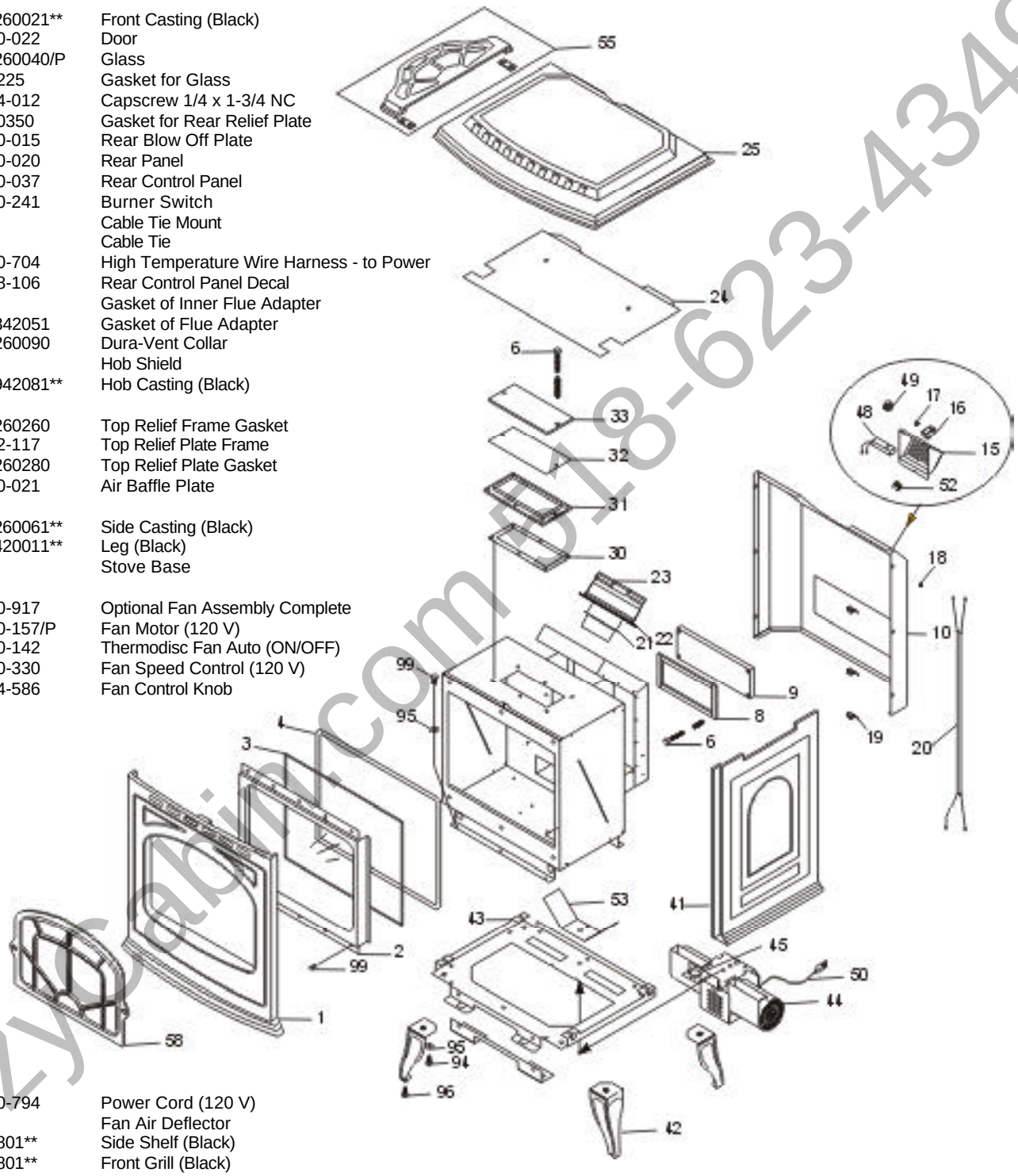

50)	910-794	Power Cord (120 V)
53)	*	Fan Air Deflector
55)	43801**	Side Shelf (Black)
58)	44801**	Front Grill (Black)
94)	*	Capscrew 3/8 x 3/4" Zinc plated
95)	*	Washer 3/8 Flat Zinc Plated
96)	*	Levelling Bolt - 5/16 x 5/8 Hex Head
99)	*	Bolt 1/4 - 20 x 1/2 Hex Head
	908-788	Manual

**Last digit of part no. represents colour code: 1=Black, 4=Blush, 5=Brown, 7=Hunter Green, 8=Claret, 9=Forest Green

*Not available as a replacement part.

CozyCabin.com 518-623-4349

NOTES

CozyCabin.com 518-623-4349

WARRANTY

Waterford Fireplace Products are designed with reliability and simplicity in mind. In addition, our internal Quality Assurance Team carefully inspects each unit thoroughly before it leaves our facility. FPI Fireplace Products International Ltd. is pleased to extend this limited lifetime warranty to the original purchaser of a Waterford Product.

The Warranty: Limited Lifetime
External casting, not directly in contact with the fire, such as hobs, sides, ash lips, legs, fronts and fire doors, are covered against cracks and warps resulting from manufacturer defects, parts and subsidized labour* for three (3) years from the date of purchase and parts only thereafter.

The combustion chamber, heat exchanger, burner tubes/pans, logs, embers and all gold plating (against defective manufacture only) are covered under the Limited Lifetime Warranty for five (5) years for parts and subsidized labour* and parts only thereafter.

Glass is covered for lifetime against thermal breakage only, parts and subsidized labour* for three (3) years and parts only thereafter from date of purchase.

Electrical and mechanical components such as blowers, switches, wiring, thermodiscs, FPI remote controls, spill switches, thermopiles, thermocouples, pilot assembly components, and gas valves are covered for one year parts and subsidized labour* from the date of purchase. Blowers and valves replaced under warranty are considered repairs and continue as if new with appliance. ie. twelve (12) months from original purchase date of appliance with a minimum of three (3) months coverage from date of replacement.

FPI venting components are covered parts and subsidized labour* for three (3) years from date of installation and parts only thereafter.

Conditions:
Porcelain/Enamel - Absolute perfection is neither guaranteed nor commercially possible. Any chips must be reported and inspected by an authorized dealer within three days of installation. Reported damage after this time will be subject to rejection.

Any part or parts of this unit which in our judgement show evidence of such defects will be repaired or replaced at FPI's option, through an accredited distributor or agent provided that the defective part be returned to the distributor or agent **Transportation Prepaid,** if requested.

It is the general practice of FPI to charge for larger, higher priced replacement parts and issue credit once the replaced component has been returned to FPI and evaluated for manufacturer defect.

The authorized selling dealer is responsible for all in-field service work carried out on your Waterford product. FPI will not be liable for results or costs of workmanship from unauthorized service persons or dealers.

At all times FPI reserves the right to inspect product in the field which is claimed to be defective.

All claims must be submitted to FPI by authorized selling dealers. It is essential that all submitted claims provide all of the necessary information including customer name, purchase date, serial #, type of unit, problem, and part or parts requested, without this information the warranty will be invalid.

Exclusions:
This limited Lifetime Warranty does not extend to or include paint (charcoal units), porcelain (including pinholes, scratches and minor shade mismatch), door or glass gasketing or trim.

At no time will FPI be liable for any consequential damages which exceed the purchase price of the unit. FPI has no obligation to enhance or modify any unit once manufactured. ie. as products evolve, field modifications or upgrades will not be performed.

FPI will not be liable for travel costs for service work.

Installation and environmental problems are not the responsibility of the manufacturer and therefore are not covered under the terms of this warranty policy.

Refractory liners, gaskets, door handles, paint are not covered under the terms of this warranty policy.

Any unit which shows signs of neglect or misuse is not covered under the terms of this warranty policy.

The warranty will not extend to any part which has been tampered with or altered in any way, or in our judgment has been subject to misuse, improper installation, negligence or accident, spillage or downdrafts caused by environmental or geographical conditions, inadequate ventilation, excessive offsets, negative air pressure caused by mechanical systems such as furnaces, fans, clothes dryer, etc.

Freight damage to stoves and replacement parts is not covered by warranty and is subject to a claim against the freight carrier by the dealer.

FPI will not be liable for acts of God, or acts of terrorism, which cause malfunction of the appliance.

Performance problems due to operator error will not be covered by this warranty policy.

Products made or provided by other manufacturers and used in conjunction with the operation of this appliance without prior authorization from Waterford, may nullify your warranty on this product.

Simpson Dura-Vent venting components are covered by Simpson Dura-Vent Inc. warranty.

** Subsidy according to job scale as predetermined by FPI.*

CozyCabin.com 518-623-4349

WATERFORD
Irish Stoves
Lifetime Warranty
ASK FOR DETAILS

Waterford fireplace products are designed with reliability and simplicity in mind. In addition, our internal Quality Assurance Team carefully inspects each unit thoroughly before it leaves our door.

Waterford Irish Stoves is pleased to extend this Limited Lifetime Warranty to the original purchaser of a Waterford Product.

See the inside back cover for details.

Register your Waterford online at http://www.waterfordstoves.com

Installer: Please complete the following information

Dealer Name & Address: _____

_____

Installer: _____

Phone #: _____

Date Installed: _____

Serial No.: _____

CozyCabin.com 518-623-4349

Waterford is a trademark of FPI Fireplace Products International Ltd.
© Copyright 2005, FPI Fireplace Products International Ltd. All rights reserved.

Printed in Canada