INSTALLER: LEAVE THIS MANUAL WITH THE APPLIANCE.
CONSUMER: RETAIN THIS MANUAL FOR FUTURE REFERENCE.

NAPOLEON®
QUALITY FIREPLACES

INSTALLATION AND OPERATING INSTRUCTIONS

CERTIFIED UNDER CANADIAN AND AMERICAN NATIONAL STANDARDS: ANSI Z21.88, CSA 2.33 FOR VENTED GAS FIREPLACE HEATERS.

GDS50N / GS50N
NATURAL GAS

GDS50P / GS50P
PROPANE

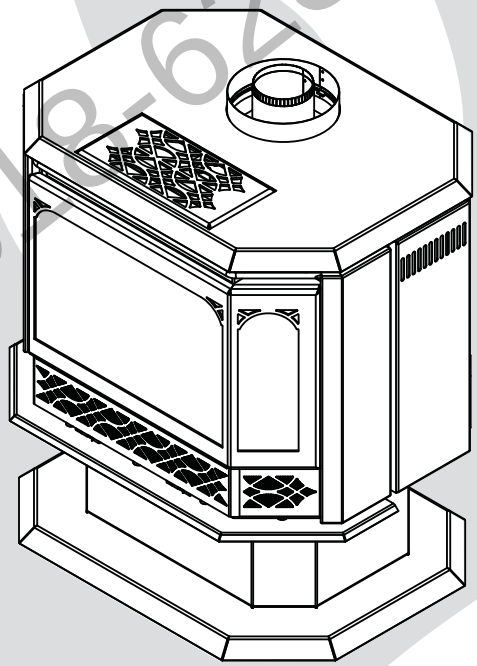

CERTIFIED FOR CANADA AND UNITED STATES USING ANSI/CSA METHODS.

SAFETY INFORMATION

⚠ WARNING

If the information in these instructions are not followed exactly, a fire or explosion may result causing property damage, personal injury or loss of life.

- Do not store or use gasoline or other flammable vapors and liquids in the vicinity of this or any other appliance.

- WHAT TO DO IF YOU SMELL GAS:

- **Do not try to light any appliance.**
- **Do not touch any electrical switch; do not use any phone in your building.**
- **Immediately call your gas supplier from a neighbour's phone. Follow the gas supplier's instructions.**
- **If you cannot reach your gas supplier, call the fire department.**

- Installation and service must be performed by a qualified installer, service agency or the supplier.

HPBA Hearth, Patio & Barbecue Association

GO GREEN ECO FRIENDLY TECHNOLOGY

Quality System Certified To ISO 9001-2008

ETL LISTED C US Intertek

APPLY SERIAL NUMBER LABEL FROM CARTON

Serial No. XXXXXX000000
MODEL NO.

Wolf Steel Ltd., 24 Napoleon Rd., Barrie, ON, L4M 4Y8 Canada /
103 Miller Drive, Crittenden, Kentucky, USA, 41030
Phone (705)721-1212 • Fax (705)722-6031 • www.napoleonfireplaces.com • ask@napoleonproducts.com

$10.00

1.22

W415-0098 / F / 10.22.10

Copycabin.com 518-623-4349

TABLE OF CONTENTS

1.0	**INSTALLATION OVERVIEW**	**3**
2.0	**INTRODUCTION**	**4**
2.1	DIMENSIONS	5
2.2	GENERAL INSTRUCTIONS	6
2.3	GENERAL INFORMATION	7
2.4	RATING PLATE INFORMATION	8
3.0	**VENTING**	**9**
3.1	VENTING LENGTHS AND COMPONENTS	9
3.2	TYPICAL VENT INSTALLATION	10
3.3	SPECIAL VENT INSTALLATIONS	11
3.3.1	PERISCOPE TERMINATION	11
3.4	VENT TERMINAL CLEARANCES	12
3.5	VENTING APPLICATION FLOW CHART	13
3.6	DEFINITIONS	13
3.7	ELBOW VENT LENGTH VALUES	13
3.8	HORIZONTAL TERMINATION	14
3.9	VERTICAL TERMINATION	16
4.0	**INSTALLATION**	**18**
4.1	MINIMUM CLEARANCE TO COMBUSTIBLES	18
4.2	WALL AND CEILING PROTECTION	19
4.2.1	HORIZONTAL INSTALLATION	19
4.2.2	VERTICAL INSTALLATION	20
4.2.3	HORIZONTAL AIR TERMINAL INSTALLATION	21
4.2.4	VERTICAL AIR TERMINAL INSTALLATION	22
4.2.5	APPLIANCE VENT CONNECTION	23
4.2.6	VERTICAL THROUGH EXISTING CHIMNEY	24
4.3	B-VENT INSTALLATION - GS50	25
4.3.1	CHIMNEY INSTALLATION	25
4.3.2	INSTALLING FLASHING AND STORM COLLAR	25
4.3.3	ADDING VENT SECTIONS	26
4.3.4	INSTALLING "B" VENT	26
4.3.5	"B" VENT ADAPTATIONS	27
4.3.6	COMBUSTION AIR	27
4.4	GAS INSTALLATION	28
4.4.1	B-VENT - MODEL GS50	28
4.5	WALL SWITCH / THERMOSTAT INSTALLATION	29
4.6	MOBILE HOME INSTALLATION	29
5.0	**FINISHING**	**29**
5.1	DOOR OPENING AND CLOSING	29
5.2	LOG PLACEMENT	30
5.3	LOGO PLACEMENT	31
5.4	TRIVET INSTALLATION	31
6.0	**OPERATION**	**32**
6.1	OPERATING INSTRUCTIONS	33
6.2	TURBO BURNER OPERATION	33
6.3	SPILL SWITCH - GS50 ONLY	33
7.0	**ADJUSTMENTS**	**34**
7.1	PILOT BURNER ADJUSTMENT	34
7.2	VENTURI ADJUSTMENT	34
7.3	FLAME CHARACTERISTICS	35
8.0	**MAINTENANCE**	**35**
8.1	REPLACEMENT BLOWER INSTALLATION	36
8.2	CARE OF GLASS	37
8.3	CARE OF PLATED PARTS	37
9.0	**REPLACEMENTS**	**38**
10.0	**TROUBLE SHOOTING**	**42**
11.0	**WARRANTY**	**45**
12.0	**SERVICE HISTORY**	**46**

CozyCabin.com 518-623-4349

1.0 INSTALLATION OVERVIEW

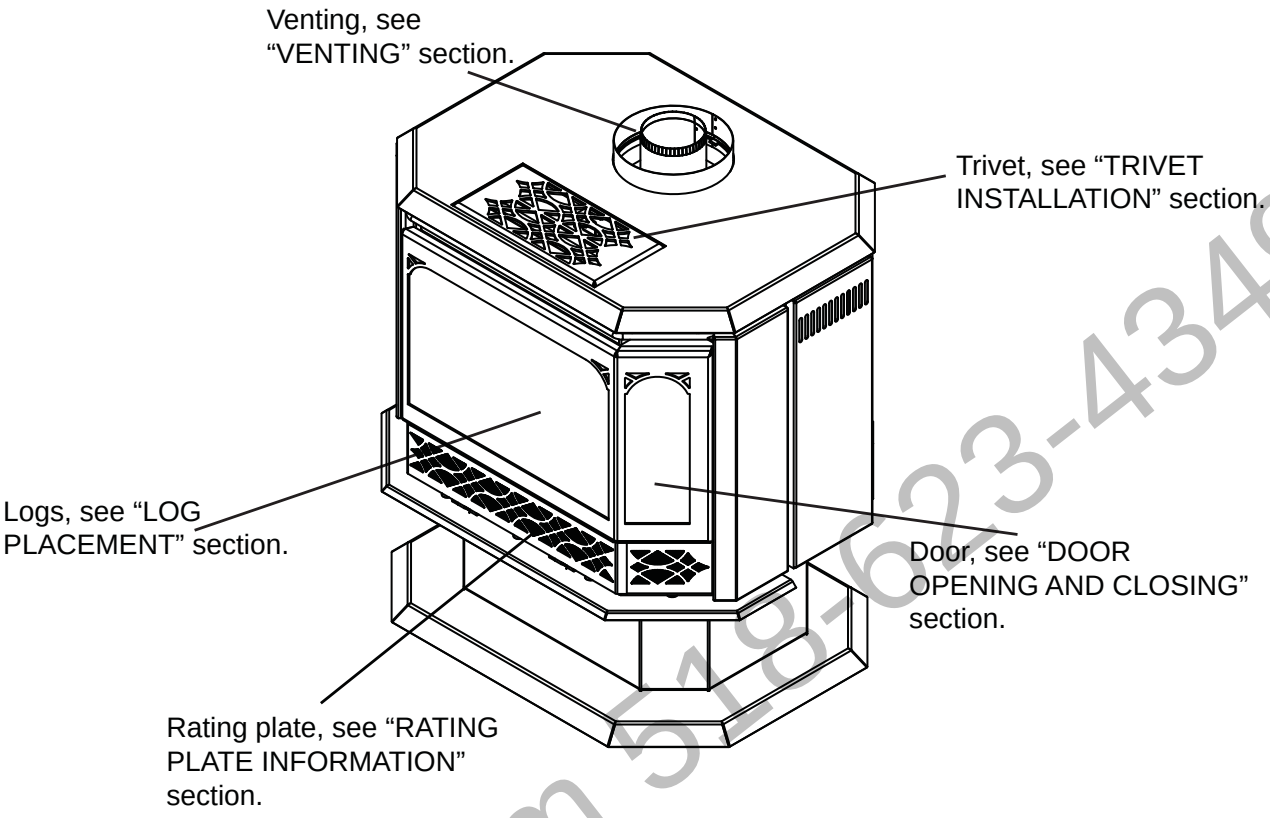

CozyCabin.com 519-623-4349

2.0 INTRODUCTION

⚠ WARNING

- **THIS APPLIANCE IS HOT WHEN OPERATED AND CAN CAUSE SEVERE BURNS IF CONTACTED.**
- **ANY CHANGES TO THIS APPLIANCE OR IT'S CONTROLS CAN BE DANGEROUS AND IS PROHIBITED.**
- Do not operate appliance before reading and understanding operating instructions. Failure to operate appliance according to operating instructions could cause fire or injury.
- Risk of fire or asphyxiation do not operate appliance with fixed glass removed.
- Do not connect 110 volts to the control valve.
- Risk of burns. The appliance should be turned off and cooled before servicing.
- Do not install damaged, incomplete or substitute components.
- Risk of cuts and abrasions. Wear protective gloves and safety glasses during installation. Sheet metal edges may be sharp.
- Do not burn wood or other materials in this appliance.
- Young children should be carefully supervised when they are in the same room as the appliance. Toddlers, young children and others may be susceptible to accidental contact burns. A physical barrier is recommended if there are at risk individuals in the house. To restrict access to an appliance or stove, install an adjustable safety gate to keep toddlers, young children and other at risk individuals out of the room and away from hot surfaces.
- Clothing or other flammable material should not be placed on or near the appliance.
- Due to high temperatures, the appliance should be located out of traffic and away from furniture and draperies.
- Ensure you have incorporated adequate safety measure to protect infants/toddlers from touching hot surfaces.
- Even after the appliance is out, the glass and/or screen will remain hot for an extended period of time.
- Check with your local hearth specialty dealer for safety screens and hearth guards to protect children from hot surfaces. These screens and guards must be fastened to the floor.
- Any safety screen or guard removed for servicing must be replaced prior to operating the appliance.
- The appliance is a vented gas-fired appliance. Do not burn wood or other materials in the appliance.
- It is imperative that the control compartments, burners and circulating blower and its passageway in the appliance and venting system are kept clean. The appliance and its venting system should be inspected before use and at least annually by a qualified service person. More frequent cleaning may be required due to excessive lint from carpeting, bedding material, etc. The appliance area must be kept clear and free from combustible materials, gasoline and other flammable vapors and liquids.
- Under no circumstances should this appliance be modified.
- This appliance must not be connected to a chimney flue pipe serving a separate solid fuel burning appliance.
- Do not use this appliance if any part has been under water. Immediately call a qualified service technician to inspect the appliance and to replace any part of the control system and any gas control which has been under water.
- Do not operate the appliance with the glass door removed, cracked or broken. Replacement of the glass should be done by a licensed or qualified service person.
- Do not strike or slam shut the appliance glass door.
- When equipped with pressure relief doors, they must be kept closed while the appliance is operating to prevent exhaust fumes containing carbon monoxide, from entering into the home. Temperatures of the exhaust escaping through these openings can also cause the surrounding combustible materials to overheat and catch fire.Only doors / optional fronts certified with the unit are to be installed on the appliance.
- Only doors / optional fronts certified with the unit are to be installed on the appliance.
- Keep the packaging material out of reach of children and dispose of the material in a safe manner. As with all plastic bags, these are not toys and should be kept away from children and infants.
- As with any combustion appliance, we recommend having your appliance regularly inspected and serviced as well as having a Carbon Monoxide Detector installed in the same area to defend you and your family against Carbon Monoxide.
- Ensure clearances to combustibles are maintained when building a mantel or shelves above the appliance. Elevated temperatures on the wall or in the air above the appliance can cause melting, discolouration or damage to decorations, a T.V. or other electronic components.
- This appliance uses and requires a fast acting thermocouple. Replace only with a fast acting thermocouple supplied by Wolf Steel Ltd.

3.1B

CozyCabin.com 518-623-4349

2.1 DIMENSIONS

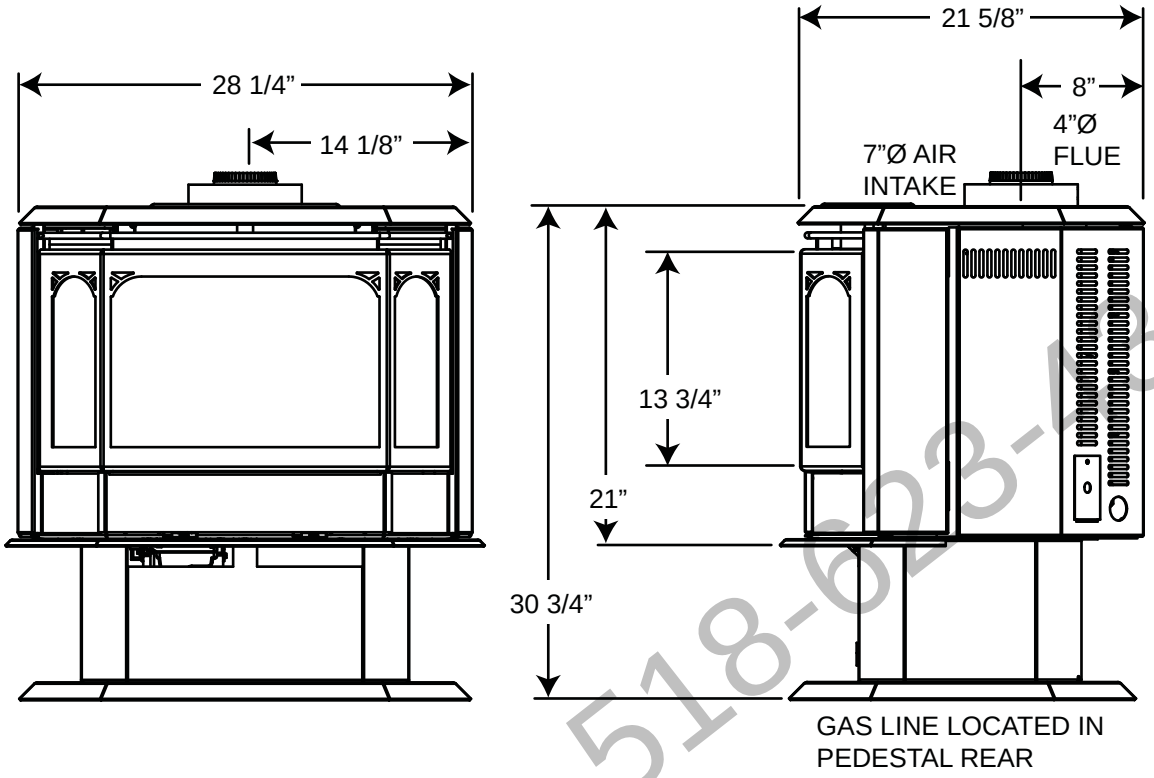

CozyCabin.com 518-623-4849

2.2 GENERAL INSTRUCTIONS

⚠ WARNING
ALWAYS LIGHT THE PILOT WHETHER FOR THE FIRST TIME OR IF THE GAS SUPPLY HAS RAN OUT, WITH THE GLASS DOOR OPENED OR REMOVED.
PROVIDE ADEQUATE CLEARANCE FOR SERVICING AND OPERATING THE APPLIANCE.
PROVIDE ADEQUATE VENTILATION.
NEVER OBSTRUCT THE FRONT OPENING OF THE APPLIANCE.
OBJECTS PLACED IN FRONT OF THE APPLIANCE MUST BE KEPT A MINIMUM OF 48" FROM THE FRONT FACE OF THE UNIT.
SURFACES AROUND AND ESPECIALLY ABOVE THE APPLIANCE CAN BECOME HOT. AVOID CONTACT WHEN THE APPLIANCE IS OPERATING.
FIRE RISK. EXPLOSION HAZARD.
HIGH PRESSURE WILL DAMAGE VALVE. DISCONNECT GAS SUPPLY PIPING BEFORE PRESSURE TESTING GAS LINE AT TEST PRESSURES ABOVE 1/2 PSIG. CLOSE THE MANUAL SHUT-OFF VALVE BEFORE PRESSURE TESTING GAS LINE AT TEST PRESSURES EQUAL TO OR LESS THAN 1/2 PSIG.
USE ONLY WOLF STEEL APPROVED OPTIONAL ACCESSORIES AND REPLACEMENT PARTS WITH THIS APPLIANCE. USING NON-LISTED ACCESSORIES (BLOWERS, DOORS, LOUVRES, TRIMS, GAS COMPONENTS, VENTING COMPONENTS, ETC.) COULD RESULT IN A SAFETY HAZARD AND WILL VOID THE WARRANTY AND CERTIFICATION.

THIS GAS APPLIANCE SHOULD BE INSTALLED AND SERVICED BY A QUALIFIED INSTALLER to conform with local codes. Installation practices vary from region to region and it is important to know the specifics that apply to your area, for example in Massachusetts State:

- This product must be installed by a licensed plumber or gas fitter when installed within the commonwealth of Massachusetts.
- The appliance damper must be removed or welded in the open position prior to installation of a appliance insert or gas log.
- The appliance off valve must be a "T" handle gas cock.
- The flexible connector must not be longer than 36 inches.
- A Carbon Monoxide detector is required in all rooms containing gas fired appliances.
- The appliance is not approved for installation in a bedroom or bathroom unless the unit is a direct vent sealed combustion product.

The installation must conform with local codes or, in absence of local codes, the National Gas and Propane Installation Code CSA B149.1 in Canada, or the National Fuel Gas Code, ANSI Z223.1 / NFPA 54 in the United States. Suitable for mobile home installation if installed in accordance with the current standard CAN/CSA Z240MH Series, for gas equipped mobile homes, in Canada or ANSI Z223.1 and NFPA 54 in the United States.

NATIONAL FIREPLACE INSTITUTE NFI CERTIFIED www.nficertified.org

We suggest that our gas hearth products be installed and serviced by professionals who are certified in the U.S. by the National Fireplace Institute® (NFI) as NFI Gas Specialists

As long as the required clearance to combustibles is maintained, the most desirable and beneficial location for an appliance is in the center of a building, thereby allowing the most efficient use of the heat created. The location of windows, doors and the traffic flow in the room where the appliance is to be located should be considered. If possible, you should choose a location where the vent will pass through the house without cutting a floor or roof joist.

If the appliance is installed directly on carpeting, vinyl tile or other combustible material other than wood flooring, the appliance shall be installed on a metal or wood panel extending the full width and depth.

Some appliances have optional fans or blowers. If an optional fan or blower is installed, the junction box must be electrically connected and grounded in accordance with local codes, use the current CSA C22.1 Canadian Electrical Code in Canada or the ANSI/NFPA 70 National Electrical code in the United States.

CozyCabin.com 518-623-4349

2.3 GENERAL INFORMATION

FOR YOUR SATISFACTION, THIS APPLIANCE HAS BEEN TEST-FIRED TO ASSURE ITS OPERATION AND QUALITY!

	GS50		GDS50	
	NG	**LP**	**NG**	**LP**
Altitude (FT)	0-2000	0-2000	0-2000	0-2000
Max. Input (BTU/HR)	44,000	40,000	44,000	40,000
Max. Output Steady State (BTU/HR)	31,200	30,000	37,000	34,400
Efficiency (w/the fan on)	77%	78%	84%	86%
Maximum A.F.U.E.	65%	67%	77%	79%
Min. Inlet Gas Supply Pressure	4.5" Water Column	11" Water Column	4.5" Water Column	11" Water Column
Max. Inlet Gas Supply Pressure	7" Water Column	13" Water Column	7" Water Column	13" Water Column
Manifold Pressure (Under Flow Conditions)	3.5" Water Column	10" Water Column	3.5" Water Column	10" Water Column

For elevations between 2,000 and 4,500 feet above sea level, this appliance must be de-rated by 10% using the certified high altitude kit. When the appliance is installed at elevations above 4,500ft, and in the absence of specific recommendations from the local authority having jurisdiction, the certified high altitude input rating shall be reduced at the rate of 4% for each additional 1,000ft.

Change in flame appearance from "HI" to "LO" is more evident in natural gas than in propane. Expansion / contraction noises during heating up and cooling down cycles are normal and to be expected.

GDS50: This appliance is not approved for closet or recessed installations. It is approved for bathroom, bedroom and bed-sitting room installations and is suitable for mobile homes. The natural gas model is suitable for installation in a mobile home that is permanently positioned on its site and fueled with natural gas.

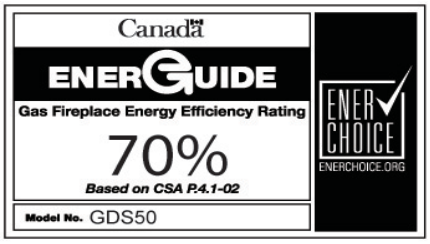

GS50: This appliance is approved for bedroom and bed-sitting room installations.

CozyCabin.com 518-623-4349

2.4 RATING PLATE INFORMATION

CERTIFIED UNDER/HOMOLOGUE SELON LES NORMES: CSA 2.33-2009, ANSI Z21.88 -2009 VENTED GAS FIREPLACE HEATER

CERTIFIED UNDER/HOMOLOGUE SELON LES NORMES: CSA 2.33-2009, ANSI Z21.88-2009 VENTED GAS FIREPLACE HEATER

☐ CDVS500 -N ☐ GDS50 -N ☐ CS500-N ☐ GS50-N

C ETL LISTED US Intertek

GDS50 -P ☐ CDVS50 -P ☐ GS50-P ☐ CS50-P ☐

☐ 0-2000FT (0-610m)	☐ 2000-4500FT (610-1370m)	ALTITUDE / ELEVATION	0-2000FT (0-610m) ☐	2000-4500FT (610-1370m) ☐
44,000 BTU/h	40,000 BTU/h	* INPUT / ALIMENTATION *	40,000 BTU/h	36,000 BTU/h
20,000 BTU/h	18,000 BTU/h	REDUCED INPUT / ALIMENTATION REDUITE	21,000 BTU/h	18,000 BTU/h
33,000 BTU/h	30,000 BTU/h	OUTPUT (MODEL GDS50) RENDEMENT	30,400 BTU/h	27,400 BTU/h
31,200 BTU/h	28,400 BTU/h	OUTPUT (MODEL GS50) RENDEMENT	30,000 BTU/h	26,400 BTU/h

* ALTITUDE DOWNRATING CONDITIONS APPLY TO CANADA ONLY
LES CONDITIONS DE BAISSE D'EVALUATION SELON L'ALTITUDE S'APPLIQUENT AU CANADA SEULEMENT

MANIFOLD PRESSURE: 3.5 INCHES W.C. (NG) / 10 INCHES W.C.(LP)
PRESSION AU COLLECTEUR: 3.5" D'UNE COLONNE D'EAU(GN)
10" D'UNE COLONNE D'EAU (PG)
MIN SUPPLY PRESSURE: 4.5" W.C.(NG) / 11" W.C. (LP)
PRESSION D'ALIMENTATION MIN: 4.5" D'UNE COLONNE D'EAU (GN)
11" D'UNE COLONNE D'EAU (PG)
MAX. SUPPLY PRESSURE: 7" W.C. (NG) / 13" W.C. (LP)
PRESSION D'ALIMENTATION MAX: 7" D'UNE COLONNE D'EAU (GN)
13" D'UNE COLONNE D'EAU (PG)

FOR USE WITH GLASS DOORS CERTIFIED WITH THIS UNIT ONLY.
UTILISER AVEC LES PORTES VITREES HOMOLOGUEES SEULEMENT AVEC CETTE UNITE.

WARNING: DO NOT ADD ANY MATERIAL TO THE APPLIANCE, WHICH WILL COME IN CONTACT WITH THE FLAMES, OTHER THAN THAT SUPPLIED BY THE MANUFACTURER WITH THE APPLIANCE.
AVERTISSEMENT: N'AJOUTEZ PAS A CET APPAREIL AUCUN MATERIAU DEVANT ENTRER EN CONTACT AVEC LES FLAMMES AUTRE QUE CELUI QUI EST FOURNI AVEC CET APPAREIL PAR LE FABRICANT.

MINIMUM CLEARANCE TO COMBUSTIBLE MATERIAL / DEGAGEMENTS MINIMAUX DES MATERIAUX COMBUSTIBLES:

A	7"	**D**	17½"
B	2"	**E**	6¼"
C	1"	**F**	9½"

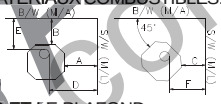

20" TO CEILING FROM STOVE TOP
20" ENTRE LE DESSUS DU FOYER ET LE PLAFOND
ELECTRICAL RATING / CLASS.: 115V 1.5AMP 60HZ

B-VENT MODELS GS50/CS500 APPROVED FOR BEDROOM, & BEDSITTING ROOM INSTALLATION. HOMOLOGUE POUR INSTALLATION DANS UNE CHAMBRE A COUCHER, & UN STUDIO.

STEADY STATE EFFICIENCY (NG): 71% FAN OFF / 77% FAN ON
STEADY STATE EFFICIENCY (LP): 73% FAN OFF / 78% FAN ON
EFFICACITE CONSTANTE (GN): 71% VENT. ARRETE
77% VENT. FONCTIONNE
EFFICACITE CONSTANTE (GP): 73% VENTILATEUR ARRETE
78% VENTILATEUR FONCTIONNE
STEADY STATE EFFICIENCY APPLIES TO CANADA ONLY / L'EFFICACITE CONSTANTE S'APPLIQUENT SEULEMENT AU CANADA.
AFUE (NG/LP) (GN/GP): 64% / 67%
THIS APPLIANCE MUST BE INSTALLED USING AN ADAPTER KIT GS-150KT. CET APPAREIL DOIT ETRE INSTALLE EN UTILISANT UN ENSEMBLE ADAPTATEUR GS-150KT.

DIRECT VENT MODELS GDS50/CDVS500
APPROVED FOR BEDROOM, BATHROOM & BEDSITTING ROOM INSTALLATION. SUITABLE FOR MOBILE HOME INSTALLATION IF INSTALLED IN ACCORDANCE WITH THE CURRENT STANDARD CAN/CSA Z240MH SERIES GAS EQUIPPED MOBILE HOMES, IN CANADA OR IN THE UNITED STATES THE MANUFACTURED HOME CONTRUCTION AND SAFETY STANDARD, TITLE 24 CFR, PART 3280. WHEN THIS US STANDARD IS NOT APPLICABLE USE THE STANDARD FOR FIRE SAFETY CRITERIA FOR MANUFACTURED HOME INSTALLATIONS, SITES AND COMMUNITIES, ANSI / NFPA 501A.
HOMOLOGUE POUR INSTALLATION DANS UNE CHAMBRE A COUCHER, UNE SALLE DE BAIN ET UN STUDIO. APPROPRIE POUR INSTALLATION DANS UNE MAISON MOBILE SI SON INSTALLATION CONFORME AUX EXIGENCES DE LA NORME CAN/CSA Z240MH SERIE DE MAISONS MOBILES EQUIPEES AU GAZ, EN VIGUEUR AU CANADA OU AUX ETATS-UNIS DE LA NORME DE SECURITE ET DE CONSTRUCTION DE MAISONS MANUFACTUREES, TITRE 24 CFR, SECTION 3280. DANS LE CAS OU CETTE NORME D'ETATS-UNIS NE PEUT ETRE APPLIQUEE, SE REFERER A LA NORME RELATIVE AU CRITERE DE MESURES DE SECURITE CONTRE L'INCENDIE POUR LES INSTALLATIONS DANS LES MAISONS MANUFACTURES, LES SITES ET LES COMMUNAUTES, ANSI/NFPA 501A .

STEADY STATE EFFICIENCY (NG): 75% FAN OFF / 78% FAN ON
STEADY STATE EFFICIENCY (LP): 76% FAN OFF / 79% FAN ON
EFFICACITE CONSTANTE (GN): 75% VENT. ARRETE
78% VENT. FONCTIONNE
EFFICACITE CONSTANTE (GP): 76% VENTILATEUR ARRETE
79% VENTILATEUR FONCTIONNE
STEADY STATE EFFICIENCY APPLIES TO CANADA ONLY / L'EFFICACITE CONSTANTE S'APPLIQUENT SEULEMENT AU CANADA.
AFUE (NG/LP) (GN/GP): 65% / 67%
MINIMUM AND MAXIMUM HORIZONTAL VENT LENGTHS ARE 25 INCHES AND 20 FEET RESPECTIVELY. LES LONGUEURS HORIZONTALES MINIMALE ET MAXIMALE SONT 25 POUCES ET 20 PIEDS RESPECTIVEMENT.
THE APPLIANCE MUST BE VENTED USING THE APPROPRIATE NAPOLEON VENT KITS. SEE OWNERS INSTALLATION MANUAL FOR VENTING SPECIFICS. PROPER REINSTALLATION AND RESEALING IS NECESSARY AFTER SERVICING THE VENT-AIR INTAKE SYSTEM.
L'APPAREIL DOIT EVACUER SES GAZ EN UTILISANT L'ENSEMBLE D'EVACUATION PROPRE A NAPOLEON. REFERER AU MANUEL D'INSTALLATION DE PROPRIETAIRE POUR L'EVACUATION PRECISE. IL EST IMPORTANT DE BIEN REINSTALLER ET RESCELLER L'EVENT APRES AVOIR ASSURE LE MAINTIEN DU SYSTEME DE PRISE D'AIR.

NOT FOR USE WITH SOLID FUEL
UN COMBUSTIBLE SOLIDE NE DOIT PAS ETRE UTILISE AVEC CET APPAREIL

WOLF STEEL LTD.
24 NAPOLEON ROAD, BARRIE, ON, L4M 4Y4 CANADA

SERIAL NUMBER
NO. DE SERIE GDS50

W385-0181 / G

For rating plate location, see "INSTALLATION OVERVIEW" section

<u>INSTALLER:</u> It is your responsibility to check off the appropriate box on the rating plate according to the model, venting and gas type of the unit.

This illustration is for reference only. Refer to the rating plate on the appliance for accurate information.

CozyGuy.com 905-624-4349

3.0 VENTING

⚠ WARNING

RISK OF FIRE, MAINTAIN SPECIFIED AIR SPACE CLEARANCES TO VENT PIPE AND APPLIANCE.

IF VENTING IS INCLUDED WITH SPACERS THE VENT SYSTEM MUST BE SUPPORTED EVERY 3 FEET FOR BOTH VERTICAL AND HORIZONTAL RUNS. USE SUPPORTS OR EQUIVALENT NON-COMBUSTIBLE STRAPPING TO MAINTAIN THE REQUIRED CLEARANCE FROM COMBUSTIBLES. USE WOLF STEEL LTD. SUPPORT RING ASSEMBLY W010-0370 OR EQUIVALENT NON-COMBUSTIBLE STRAPPING TO MAINTAIN THE MINIMUM CLEARANCE TO COMBUSTIBLES FOR BOTH VERTICAL AND HORIZONTAL RUNS. SPACERS ARE ATTACHED TO THE INNER PIPE AT PREDETERMINED INTERVALS TO MAINTAIN AN EVEN AIR GAP TO THE OUTER PIPE. THIS GAP IS REQUIRED FOR SAFE OPERATION. A SPACER IS REQUIRED AT THE START, MIDDLE AND END OF EACH ELBOW TO ENSURE THIS GAP IS MAINTAINED. THESE SPACERS MUST NOT BE REMOVED.

THIS APPLIANCE USES A 4” EXHAUST / 7” AIR INTAKE VENT PIPE SYSTEM.
Refer to the section applicable to your installation.

For safe and proper operation of the appliance follow the venting instruction exactly. Deviation from the minimum vertical vent length can create difficulty in burner start-up and/or carboning. Under extreme vent configurations, allow several minutes (5-15) for the flame to stabilize after ignition. Vent lengths that pass through unheated spaces (attics, garages, crawl spaces) should be insulated with the insulation wrapped in a protective sleeve to minimize condensation. Provide a means for visually checking the vent connection to the appliance after the appliance is installed. Use a firestop, vent pipe shield or attic insulation shield when penetrating interior walls, floor or ceiling.
NOTE: If for any reason the vent air intake system is disassembled; reinstall per the instructions provided for the initial installation.

7.1

3.1 VENTING LENGTHS AND COMPONENTS

Use only Wolf Steel, Simpson Dura-Vent, Selkirk Direct Temp, American Metal Amerivent or Metal-Fab venting components. Minimum and maximum vent lengths, for both horizontal and vertical installations, and air terminal locations for either system are set out in this manual and must be adhered to. For Simpson Dura-Vent, Selkirk Direct Temp, American Metal Amerivent and Metal-Fab follow the installation procedure provided with the venting components.

A starter adaptor must be used with the following vent systems and may be purchased from the corresponding supplier:

PART	4”/7”	SUPPLIER	WEBSITE
Duravent	GDS924N	Wolf Steel	www.duravent.com
Amerivent	4DSC-N2	American Metal	www.americanmetalproducts.com
Direct Temp	4DT-AAN	Selkirk	www.selkirkcorp.com
SuperSeal	4DNA	Metal-Fab	www.mtlfab.com

*** For Simpson Dura-Vent, Selkirk Direct Temp, American Metal Amerivent and Metal-Fab follow the installation procedure found on the website for your venting supplier.**

For vent systems that provide seals on the inner exhaust flue, only the outer air intake joints must be sealed using a red high temperature silicone (RTV). This same sealant may be used on both the inner exhaust and outer intake vent pipe joints of all other approved vent systems except for the exhaust vent pipe connection to the appliance flue collar which must be sealed using the black high temperature sealant Mill Pac.

When using Wolf Steel venting components, use only approved Wolf Steel termination kits: wall terminal kit **GD175** (7/12’ of venting included), or 1/12 to 7/12 pitch roof terminal kit **GD110**, 8/12 to 12/12 roof terminal kit **GD111**, flat roof terminal kit **GD112** or periscope kit **GD180** (for wall penetration below grade) in conjunction with the appropriate venting components.

CozyCabin.com 516-623-4349

For optimum flame appearance and appliance operation, keep the vent length and number of elbows to a minimum. It is recommended that all horizontal runs have a minimum 1/4" rise per foot. The air terminal must remain unobstructed at all times. Examine the air terminal at least once a year to verify that it is unobstructed and undamaged. Rigid and flexible venting systems must not be combined. Different venting manufacturers components must not be combined.

These vent kits allow for either horizontal or vertical venting of the appliance. The maximum allowable horizontal run is 20 feet. The maximum allowable vertical vent length is 40 feet. The maximum number of vent connections is two horizontally or three vertically (excluding the appliance and the air terminal connections) when using flexible venting.

Deviation from the minimum vertical vent length can create difficulty in burner start-up and/or carboning. Use an adjustable pipe as the final length of rigid piping to the stove for ease of installation.

8.5

3.2 TYPICAL VENT INSTALLATION

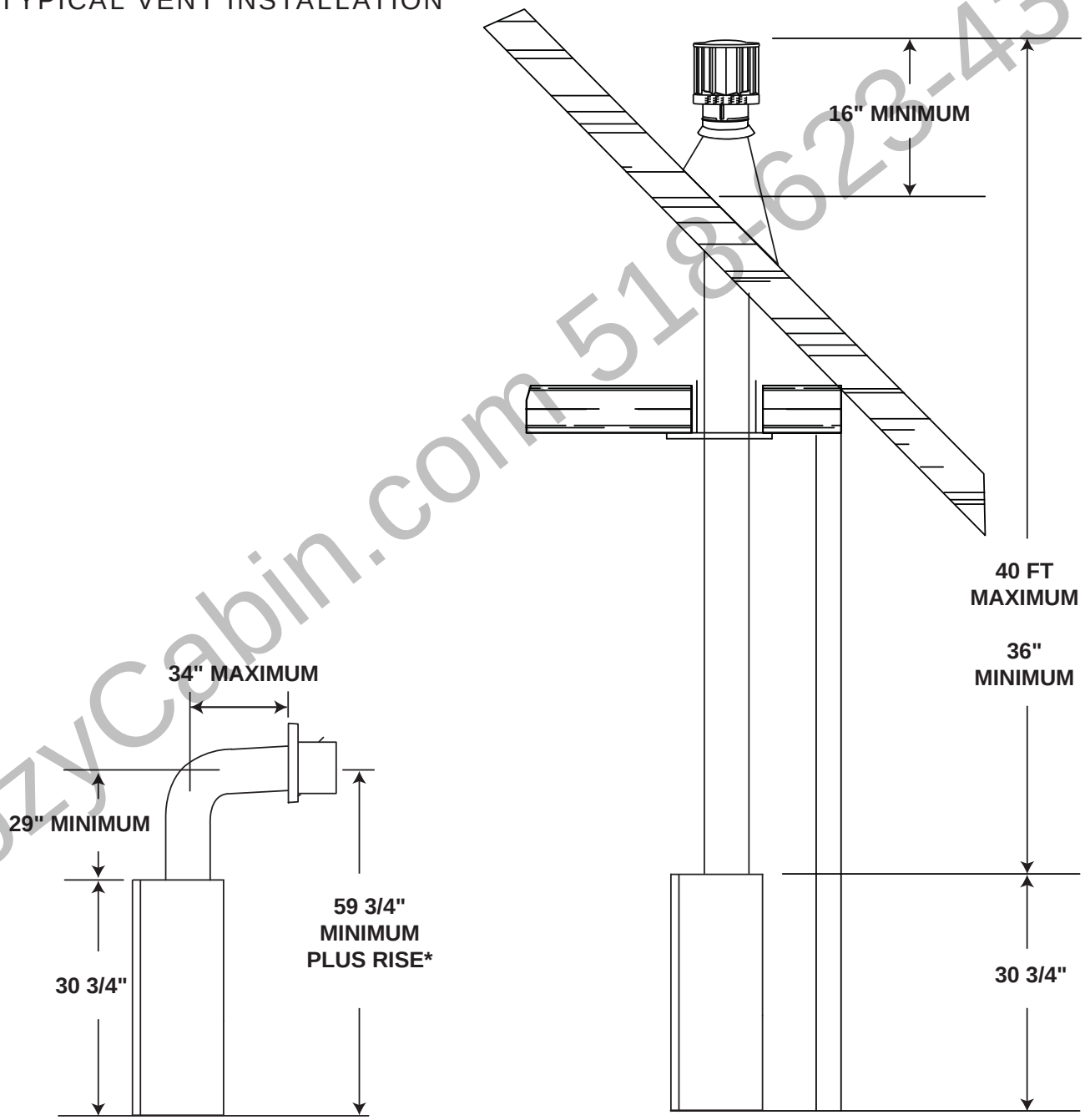

* See "VENTING" section

CozyCabin.com 518-623-4349

3.3 SPECIAL VENT INSTALLATIONS

3.3.1 PERISCOPE TERMINATION

Use the periscope kit to locate the air termination above grade. The periscope must be installed so that when final grading is completed, the bottom air slot is located a minimum 12” above grade. The maximum allowable vent length is 10’.

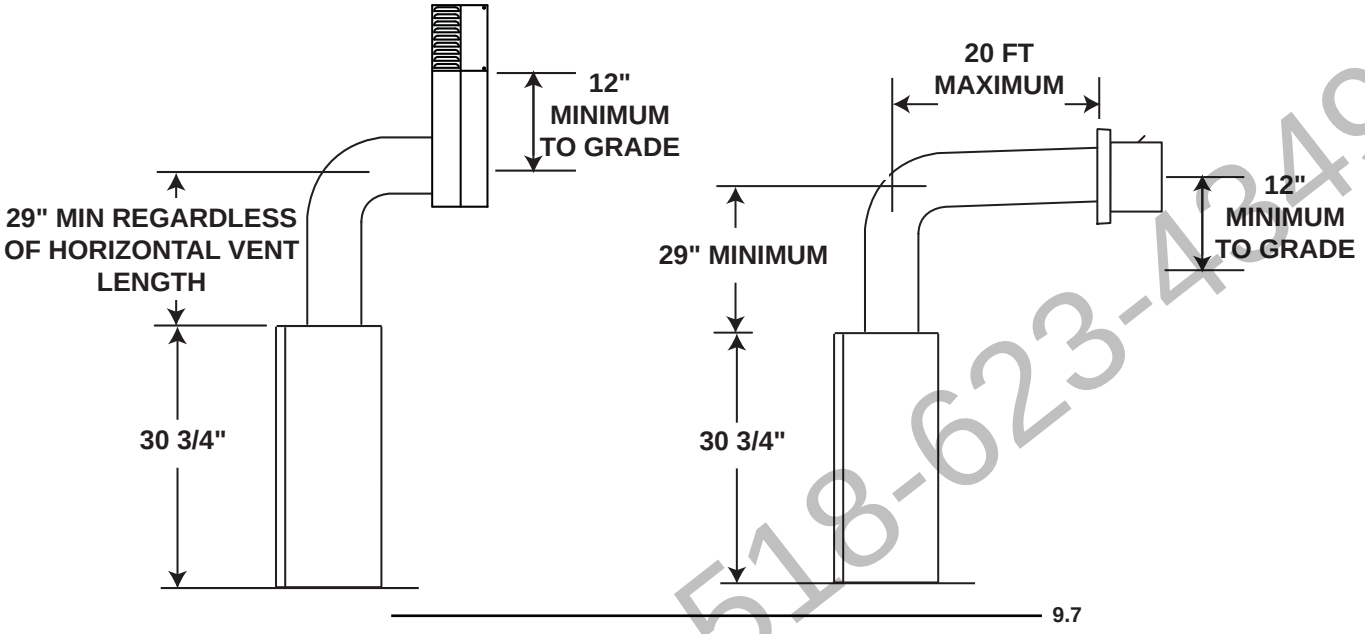

CozyCabin.com 518-623-4249

3.4 VENT TERMINAL CLEARANCES

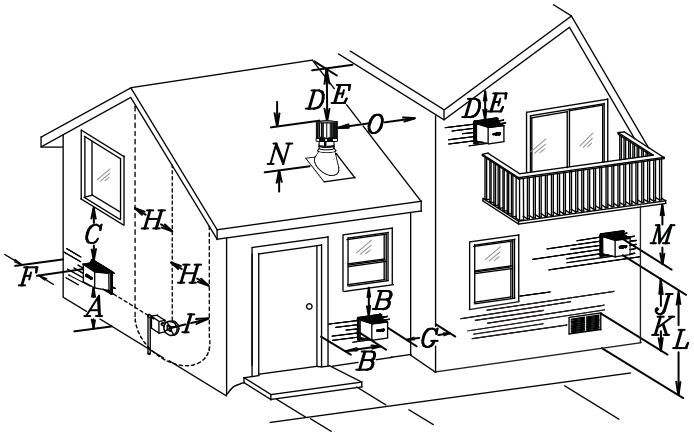

COVERED BALCONY APPLICATIONS ††*

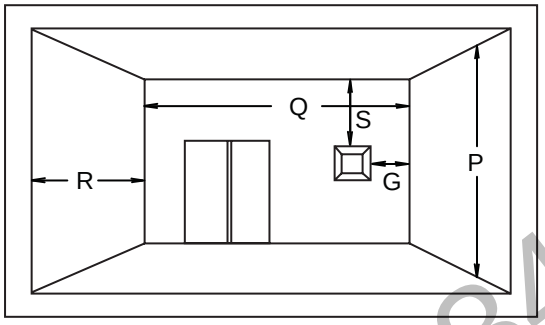

Q_{MIN}	= 3 feet
R_{MAX}	= 2 x Q_{ACTUAL}
R_{MAX}	≤ 15 feet

	INSTALLATIONS		
	CANADA	U.S.A.	
A	12”	12”	Clearance above grade, veranda porch, deck or balcony.
B	12” Δ	9” Δ	Clearance to windows or doors that open.
C	12” *	12” *	Clearance to permanently closed windows.
D	18” **	18” **	Vertical clearance to ventilated soffits located above the terminal within a horizontal distance of 2’ from the center line of the terminal.
E	12” **	12” **	Clearance to unventilated soffit.
F	0”	0”	Clearance to an outside corner wall.
G	0” ***	0” ***	Clearance to an inside **non**-combustible corner wall or protruding **non**-combustible obstructions (chimney, etc.).
	2” ***	2” ***	Clearance to an inside combustible corner wall or protruding combustible obstructions (vent chase, etc.).
H	3’	3’ ****	Clearance to each side of the center line extended above the meter / regulator assembly to a maximum vertical distance of 15’.
I	3’	3’ ****	Clearance to a service regulator vent outlet.
J	12”	9”	Clearance to a non-mechanical air supply inlet to the building or a combustion air inlet to any other appliance.
K	6’	3’ †	Clearance to a mechanical air supply inlet.
L	7’ ‡	7’ ****	Clearance above a paved sidewalk or paved driveway located on public property.
M	12” ††	12” ****	Clearance under a veranda, porch or deck.
N	16”	16”	Clearance above the roof.
O	2’ †*	2’ †*	Clearance from an adjacent wall including neighbouring buildings.
P	8’	8’	Roof must be **non**-combustible without openings.
Q	3’	3’	See chart for wider wall dimensions.
R	6’	6’	See chart for deeper wall dimensions. The terminal shall not be installed on any wall that has an opening between the terminal and the open side of the structure.
S	12”	12”	Clearance under a covered balcony

Δ The terminal shall not be located less than 6 feet under a window that opens on a horizontal plane in a structure with three walls and a roof.

* Recommended to prevent condensation on windows and thermal breakage

** It is recommended to use a heat shield and to maximize the distance to vinyl clad soffits.

*** The periscope requires a minimum 18 inches clearance from an inside corner.

**** This is a recommended distance. For additional requirements check local codes.

† 3 feet above if within 10 feet horizontally.

‡ A vent shall not terminate where it may cause hazardous frost or ice accumulations on adjacent property surfaces.

†† Permitted only if the veranda, porch, or deck is fully open on a minimum of two sides beneath the floor.

†* Recommended to prevent recirculation of exhaust products. For additional requirements check local codes.

††* Permitted only if the balcony is fully open on a minimum of one side.

NOTE: Clearances are in accordance with local installation codes and the requirements of the gas supplier.

CozyCabin.com 518-623-4349

3.5 VENTING APPLICATION FLOW CHART

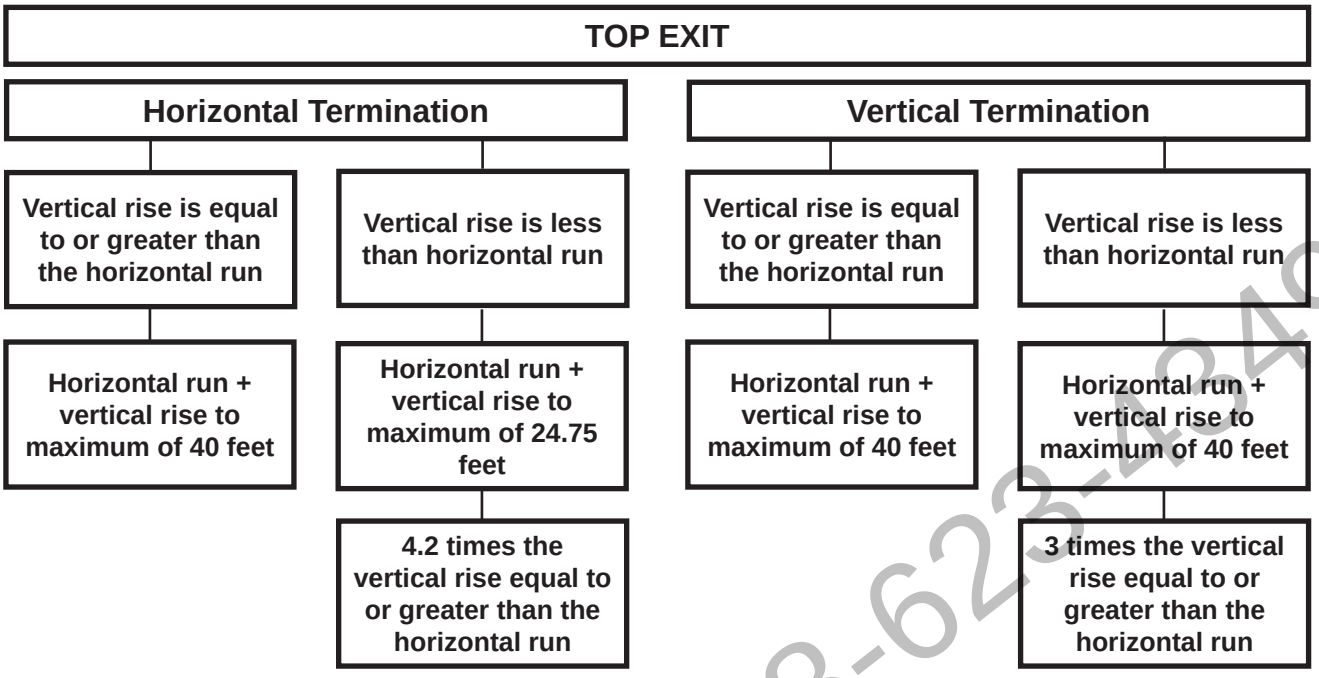

13.1

3.6 DEFINITIONS

For the following symbols used in the venting calculations and examples are:

> - greater than
≥ - equal to or greater than
< - less than
≤ - equal to or less than
H_T - total of both horizontal vent lengths (Hr) and offsets (Ho) in feet
H_R - combined horizontal vent lengths in feet
H_O - offset factor: .03 (total degrees of offset - 90°*) in feet
V_T - combined vertical vent lengths in feet

14.1

3.7 ELBOW VENT LENGTH VALUES

	FEET	INCHES
1°	0.03	0.5
15°	0.45	6.0
30°	0.9	11.0
45°	1.35	16.0
90°*	2.7	32.0

* The first 90° offset has a zero value and is shown in the formula as - 90°

15.1

CozyCabin.com 518-623-4349

3.8 HORIZONTAL TERMINATION

$(H_T) \leq (V_T)$

Simple venting configuration (only one 90° elbow)

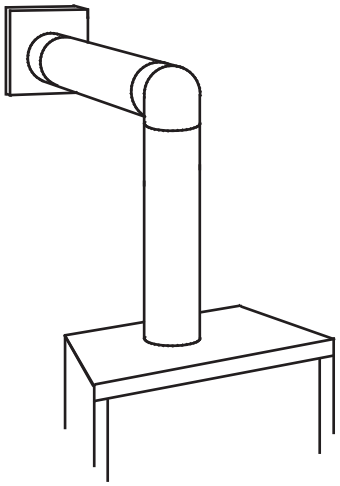

See graph to determine the required vertical rise V_T for the required horizontal run H_T.

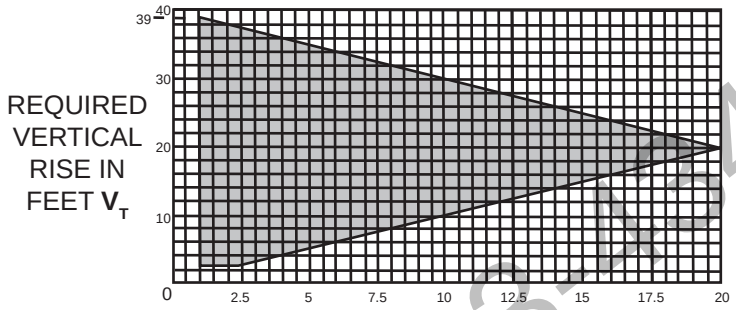

The shaded area within the lines represents acceptable values for H_T and V_T

For vent configurations requiring more than one 90° elbow, the following formulas apply:

Formula 1: $H_T \leq V_T$

Formula 2: $H_T + V_T \leq 40$ feet

Example 1:

V_1 = 3 FT

V_2 = 8 FT

$V_T = V_1 + V_2$ = 3 FT + 8 FT = 11 FT

H_1 = 2.5 FT

H_2 = 2 FT

$H_R = H_1 + H_2$ = 2.5 + 2 = 4.5 FT

H_O = .03 (three 90° elbows - 90°) = .03 (270° - 90°) = 5.4 FT

$H_T = H_R + H_O$ = 4.5 + 5.4 = 9.9 FT

$H_T + V_T$ = 9.9 + 11 = 20.9 FT

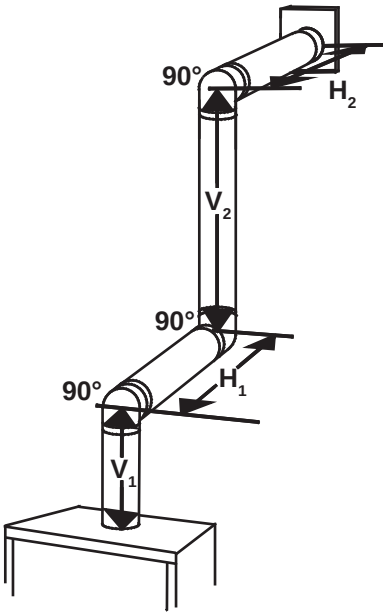

Formula 1: $H_T \leq V_T$

9.9 ≤ 11

Formula 2: $H_T + V_T \leq 40$ **FT**

20.9 ≤ 40

Since both formulas are met, this vent configuration is acceptable.

16.10

CozyCabin.com 518-623-2249

$(H_T) > (V_T)$

Simple venting configuration (only one 90° elbow)

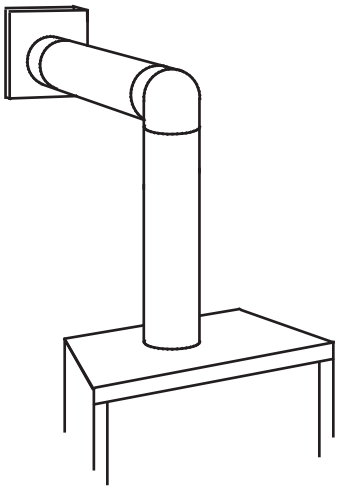

See graph to determine the required vertical rise $\mathbf{V_T}$ for the required horizontal run $\mathbf{H_T}$.

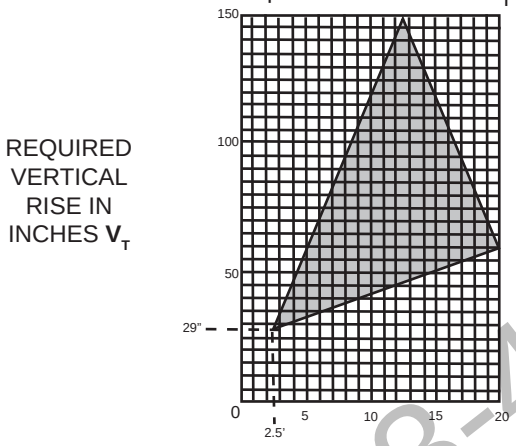

HORIZONTAL VENT RUN PLUS OFFSET IN FEET $\mathbf{H_T}$
The shaded area within the lines represents acceptable values for $\mathbf{H_T}$ and $\mathbf{V_T}$

For vent configurations requiring more than one 90° elbow, the following formulas apply:

Formula 1: $H_T \leq 4.2\ V_T$
Formula 2: $H_T + V_T \leq 24.75$ feet

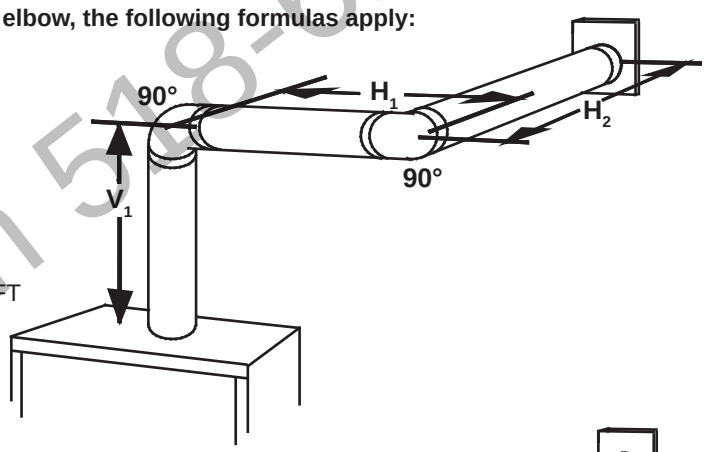

Example 2:
$V_1 = V_T = 6$ FT
$H_1 = 3$ FT
$H_2 = 5$ FT
$H_R = H_1 + H_2 = 3 + 5 = 8$ FT
$H_O = .03$ (two 90° elbows - 90°) = .03 (180° - 90°) = 2.7 FT
$H_T = H_R + H_O = 8 + 2.7 = 10.7$ FT
$H_T + V_T = 10.7 + 6 = 16.7$ FT

Formula 1: $H_T \leq 4.2\ V_T$
$4.2\ V_T = 4.2 \times 6 = 25.2$ FT
$10.7 \leq 25.2$

Formula 2: $H_T + V_T \leq 24.75$ FT
$16.7 \leq 24.75$

Since both formulas are met, this vent configuration is acceptable.

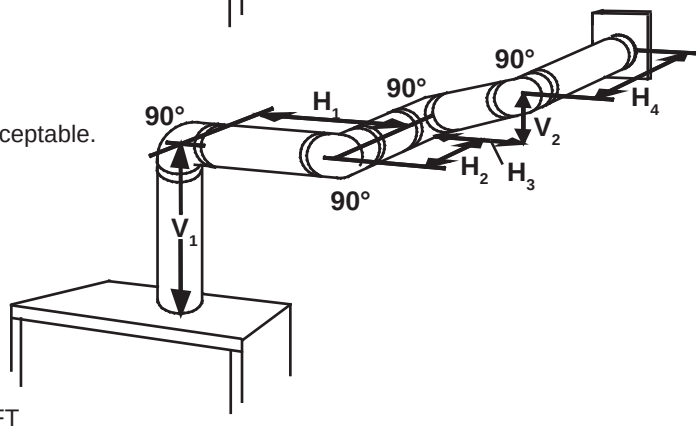

Example 3:
$V_1 = 4$ FT
$V_2 = 1.5$ FT
$V_T = V_1 + V_2 = 4 + 1.5 = 5.5$ FT
$H_1 = 2$ FT
$H_2 = 1$ FT
$H_3 = 1$ FT
$H_4 = 1.5$ FT
$H_R = H_1 + H_2 + H_3 + H_4 = 2 + 1 + 1 + 1.5 = 5.5$ FT
$H_O = .03$ (four 90° elbows - 90°) = .03 (360° - 90°) = 8.1 FT
$H_T = H_R + H_O = 5.5 + 8.1 = 13.6$ FT
$H_T + V_T = 13.6 + 5.5 = 19.1$ FT

Formula 1: $H_T \leq 4.2\ V_T$
$4.2\ V_T = 4.2 \times 5.5 = 23.1$ FT
$13.6 \leq 23.1$

Formula 2: $H_T + V_T \leq 24.75$ FT
$19.1 \leq 24.75$

Since both formulas are met, this vent configuration is acceptable.

16.10_2

CozyCabin.com 518-623-4349

3.9 VERTICAL TERMINATION

$(H_T) \leq (V_T)$

Simple venting configurations.

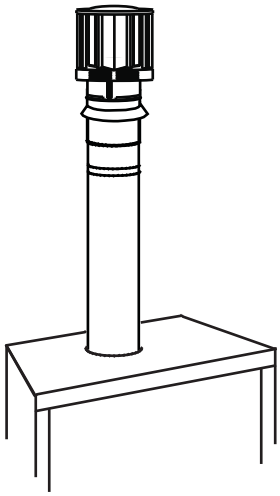

See graph to determine the required vertical rise $\mathbf{V_T}$ for the required horizontal run $\mathbf{H_T}$.

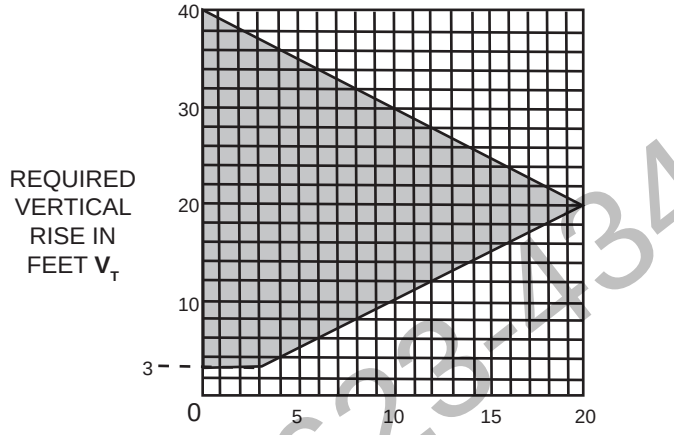

HORIZONTAL VENT RUN PLUS OFFSET IN FEET $\mathbf{H_T}$
The shaded area within the lines represents acceptable values for $\mathbf{H_T}$ and $\mathbf{V_T}$

For vent configurations requiring one or more 90° elbows the following formulas apply:

Formula 1: $H_T \leq V_T$
Formula 2: $H_T + V_T \leq 40$ feet

Example:
V_1 = 5 FT
V_2 = 6 FT
V_3 = 10 FT
$V_T = V_1 + V_2 + V_3 = 5 + 6 + 10 = 21$ FT
H_1 = 8 FT
H_2 = 2.5 FT
$H_R = H_1 + H_2 = 8 + 2.5 = 10.5$ FT
H_O = .03 (four 90° elbows - 90°)
= .03 (360° - 90°) = 8.1 FT
$H_T = H_R + H_O = 10.5 + 8.1 = 18.6$ FT
$H_T + V_T = 18.6 + 21 = 39.6$ FT

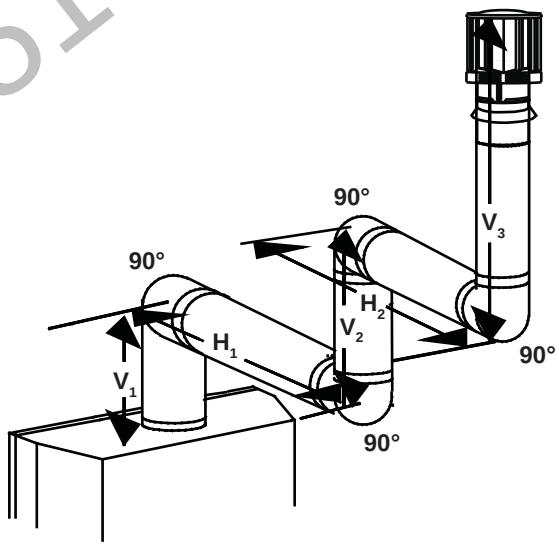

Formula 1: $\mathbf{H_T \leq V_T}$
$18.6 \leq 21$
Formula 2: $\mathbf{H_T + V_T \leq 40}$ **FT**
$39.6 \leq 40$
Since both formulas are met, this vent configuration is acceptable.

18.1

CozyCabin.com 518-623-4349

$(H_T) > (V_T)$

Simple venting configurations.

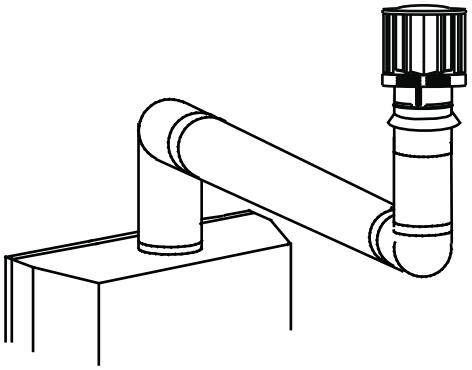

See graph to determine the required vertical rise $\mathbf{V_T}$ for the required horizontal run $\mathbf{H_T}$.

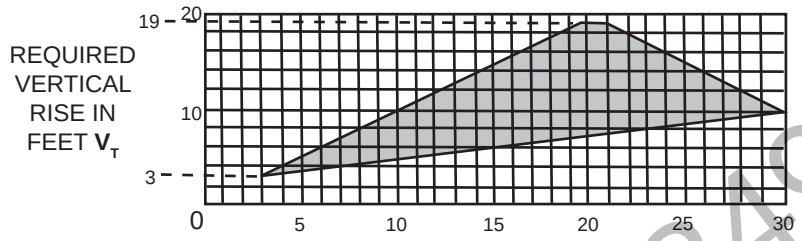

The shaded area within the lines represents acceptable values for $\mathbf{H_T}$ and $\mathbf{V_T}$.

For vent configurations requiring more than two 90° elbows the following formulas apply:

Formula 1: $H_T \leq 3V_T$
Formula 2: $H_T + V_T \leq 40$ **feet**

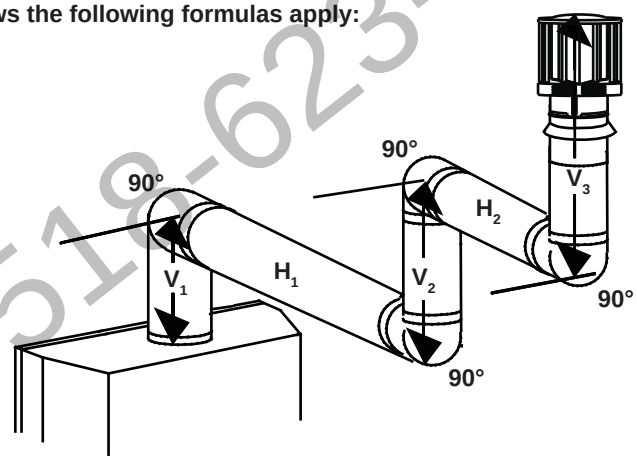

Example:
V_1 = 2 FT
V_2 = 1 FT
V_3 = 1.5 FT
$V_T = V_1 + V_2 + V_3$ = 2 + 1 + 1.5 = 4.5 FT
H_1 = 6 FT
H_2 = 2 FT
$H_R = H_1 + H_2$ = 6 + 2 = 8 FT
H_O = .03 (four 90° elbows - 90°)
= .03 (360° - 90°) = 8.1 FT
$H_T = H_R + H_O$ = 8 + 8.1 = 16.1 FT
$H_T + V_T$ = 16.1 + 4.5 = 20.6 FT

Formula 1: $H_T \leq 3V_T$
$3V_T$ = 3 x 4.5 = 13.5 FT
16.1 > 13.5

Since this formula is not met, this vent configuration is **<u>un</u>acceptable.**

Formula 2: $H_T + V_T \leq 40$ **feet**
20.6 ≤ 40

Since only formula 2 is met, this vent configuration is unacceptable and a new fireplace location or vent configuration will need to be established to satisfy both formulas.

18.1_2A

CozyCabin.com 518-623-4349

4.0 INSTALLATION

⚠ WARNING

FOR SAFE AND PROPER OPERATION OF THE APPLIANCE, FOLLOW THE VENTING INSTRUCTIONS EXACTLY.

ALL INNER EXHAUST AND OUTER INTAKE VENT PIPE JOINTS MAY BE SEALED USING EITHER RED RTV HIGH TEMP SILICONE SEALANT W573-0002 (NOT SUPPLIED) OR BLACK HIGH TEMP MILL PAC W573-0007 (NOT SUPPLIED) WITH THE EXCEPTION OF THE APPLIANCE EXHAUST FLUE COLLAR WHICH MUST BE SEALED USING MILL PAC.

IF USING PIPE CLAMPS TO CONNECT VENT COMPONENTS, 3 SCREWS MUST ALSO BE USED TO ENSURE THE CONNECTION CANNOT SLIP OFF.

DO NOT CLAMP THE FLEXIBLE VENT PIPE.

RISK OF FIRE, EXPLOSION OR ASPHYXIATION. IMPROPER SUPPORT OF THE ENTIRE VENTING SYSTEM MAY ALLOW VENT TO SAG AND SEPARATE. USE VENT RUN SUPPORTS AND CONNECT VENT SECTIONS PER INSTALLATION INSTRUCTIONS.

RISK OF FIRE, DO NOT ALLOW LOOSE MATERIALS OR INSULATION TO TOUCH THE VENT PIPE. REMOVE INSULATION TO ALLOW FOR THE INSTALLATION OF THE ATTIC SHIELD AND TO MAINTAIN CLEARANCES TO COMBUSTIBLES.

68.2A

4.1 MINIMUM CLEARANCE TO COMBUSTIBLES

As long as clearance to combustibles is kept within required distances, the most desirable and beneficial location for an appliance is in the centre of a building, thereby allowing the most efficient use of the heat created. The location of windows, doors and the traffic flow in the room where the appliance is to be located should be considered. If possible, you should choose a location where the vent will pass through the house without cutting a floor or roof joist.

MAINTAIN THESE MINIMUM CLEARANCES TO COMBUSTIBLES:

A. 7" **B.** 2" **C.** 1"* **D.** 17 1/2" **E.** 6 1/4" **F.** 9 1/2"

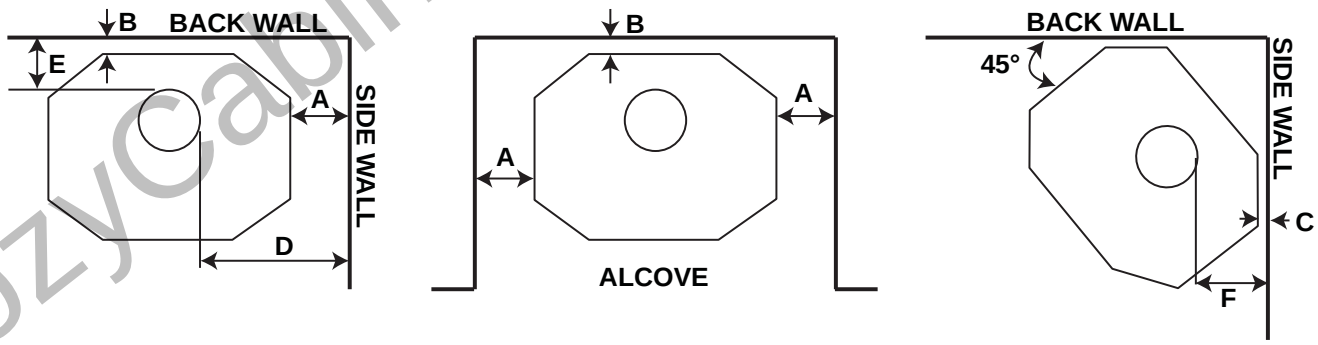

Minimum 20" from appliance top to ceiling

* At a distance of 1" from the wall, access to the blower switch, on-off switch or the blower power cord may not be practical.

CozyCabin.com 518-623-4349

4.2 WALL AND CEILING PROTECTION

⚠ WARNING

DO NOT FILL THE SPACE BETWEEN THE VENT PIPE AND ENCLOSURE WITH ANY TYPE OF MATERIAL. DO NOT PACK INSULATION OR COMBUSTIBLES BETWEEN CEILING FIRESTOPS. ALWAYS MAINTAIN SPECIFIED CLEARANCES AROUND VENTING AND FIRESTOP SYSTEMS. INSTALL WALL SHIELDS AND FIRESTOPS AS SPECIFIED. FAILURE TO KEEP INSULATION OR OTHER MATERIALS AWAY FROM VENT PIPE MAY CAUSE FIRE.

70.1

For clearances to combustible materials from the vent pipe, see “MINIMUM CLEARANCE TO COMBUSTIBLES” section.

For optimum performance it is recommended that horizontal runs have a 1/4" per rise per foot.

All inner exhaust and outer intake vent pipe joints may be sealed using either red high temp silicone sealant or black high temp Mil Pac with the exception of the appliance exhaust flue collar which must be sealed using Mil Pac (not supplied).

4.2.1 HORIZONTAL INSTALLATION

⚠ WARNING

THE FIRESTOP ASSEMBLY MUST BE INSTALLED WITH THE VENT SHIELD TO THE TOP.

TERMINALS MUST NOT BE RECESSED INTO A WALL OR SIDING MORE THAN THE DEPTH OF THE RETURN FLANGE OF THE MOUNTING PLATE.

This application occurs when venting through an exterior wall. Having determined the correct height for the air terminal location, cut and frame a hole in the exterior wall as illustrated to accommodate the firestop assembly. Dry fit the firestop assembly before proceeding to ensure the brackets on the rear surface fit to the inside surface of the horizontal framing.

The length of the vent shield may be cut shorter for combustible walls that are less than 8 1/2” thick but the vent shield must extend the full depth of the combustible wall.

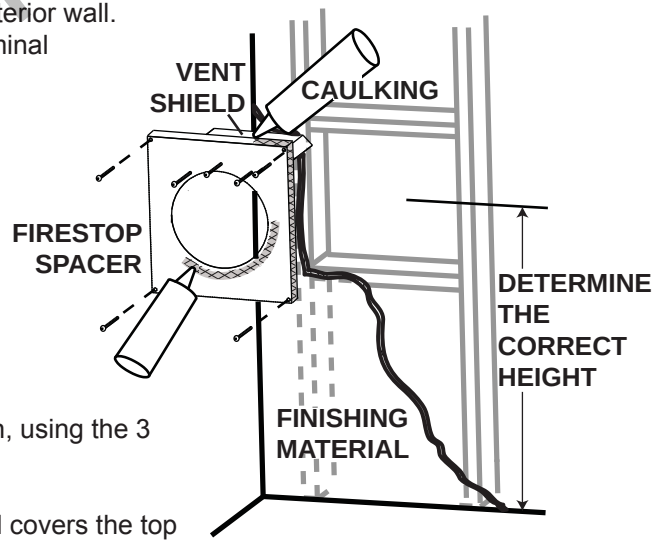

A. Assemble the shield to the spacer as shown, using the 3 shorter screws supplied.

B. Place the firestop top so that the vent shield covers the top of the vent within the opening. Ensure that both spacer and shield maintain the required clearance to combustibles.

C. Secure the spacer in place using the 4 longer screws supplied. Once the vent pipe is installed in its final position, apply sealant between the pipe and the firestop spacer.

20.5A

CozyCabin.com 518-623-4349

4.2.2 VERTICAL INSTALLATION

This application occurs when venting through a roof. Installation kits for various roof pitches are available from your authorized dealer / distributor. See accessories to order specific kits required.

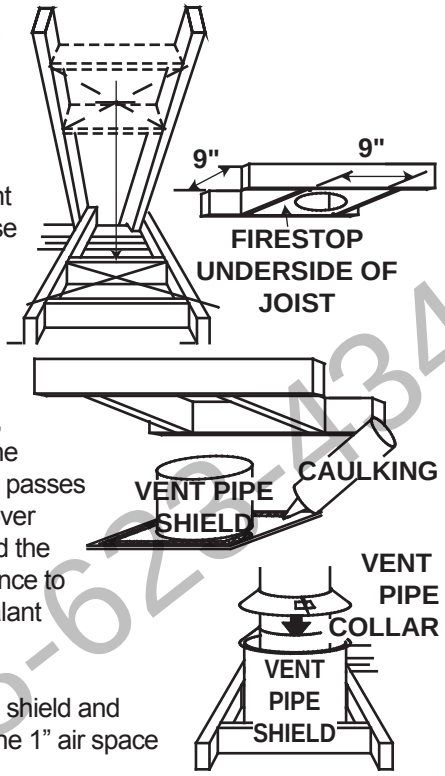

A. Determine the air terminal location, cut and frame a square opening as illustrated in the ceiling and the roof to provide the minimum 1“ clearance between the vent pipe and any combustible material. Try to center the vent pipe location midway between two joists to prevent having to cut them. Use a plumb bob to line up the center of the openings. A vent pipe shield will prevent any materials such as insulation, from filling up the 1” air space around the pipe. Nail headers between the joist for extra support.

B. Apply a bead of caulking (not supplied) to the framework or to the Wolf Steel vent pipe shield plate or equivalent (in the case of a finished ceiling), and secure over the opening in the ceiling. A firestop must be placed on the bottom of each framed opening in a roof or ceiling that the venting system passes through. Apply a bead of caulking all around and place a firestop spacer over the vent shield to restrict cold air from being drawn into the room or around the fireplace. Ensure that both spacer and shield maintain the required clearance to combustibles. Once the vent pipe is installed in its final position, apply sealant between the pipe and the firestop assembly.

C. In the attic, slide the vent pipe collar down to cover up the open end of the shield and tighten. This will prevent any materials, such as insulation, from filling up the 1” air space around the pipe.

21.1

CozyCabin.com 518-623-4349

4.2.3 HORIZONTAL AIR TERMINAL INSTALLATION

⚠ WARNING

TERMINALS MUST NOT BE RECESSED INTO A WALL OR SIDING MORE THAN THE DEPTH OF THE RETURN FLANGE OF THE MOUNTING PLATE.

DO NOT ALLOW THE INNER FLEX PIPE TO BUNCH UP ON HORIZONTAL OR VERTICAL RUNS AND ELBOWS. KEEP IT PULLED TIGHT.

SPACERS ARE ATTACHED TO THE INNER FLEX AT PREDETERMINED INTERVALS TO MAINTAIN AN EVEN AIR GAP TO THE OUTER FLEX PIPE. THIS GAP IS REQUIRED FOR SAFE OPERATION. A SPACER IS REQUIRED AT THE START, MIDDLE, AND END OF EACH ELBOW TO ENSURE THIS GAP IS MAINTAINED. THESE SPACERS MUST NOT BE REMOVED.

A. Stretch the inner flex pipe to the required length taking into account the additional length needed for the finished wall surface. Slip the vent pipe a minimum of 2" over the inner sleeve of the air terminal and secure with 3 #8 screws. Apply a heavy bead of the high temperature sealant W573-0007 Mill Pac (not supplied).

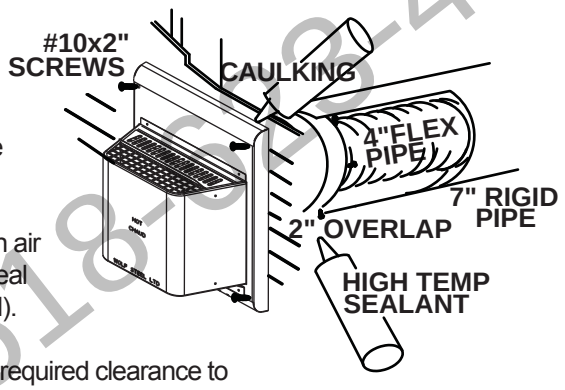

B. Using the outer rigid pipe, slide over the outer combustion air sleeve of the air terminal and secure with 3 #8 screws. Seal using high temperature sealant W573-0002 (not supplied).

C. Insert the vent pipes through the firestop maintaining the required clearance to combustibles. Holding the air terminal (lettering in an upright, readable position), secure to the exterior wall and make weather tight by sealing with caulking (not supplied).

D. From inside the house, using silicone, seal between the vent pipe and the firestop. Then slide the black trim collar over the vent pipe up to the firestop.

E. If more vent pipe needs to be used to reach the appliance, couple them together as illustrated. The vent system must be supported approximately every 3 feet for both vertical and horizontal runs. Use noncombustible strapping to maintain the minimum clearance to combustibles.

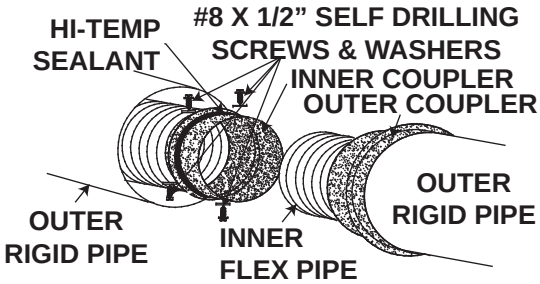

The air terminal mounting plate may be recessed into the exterior wall or siding no greater than the depth of its return flange.

23.7A

CozyCabin.com 518-543-4349

4.2.4 VERTICAL AIR TERMINAL INSTALLATION

⚠ WARNING

MAINTAIN A MINIMUM 2” SPACE BETWEEN THE AIR INLET BASE AND THE STORM COLLAR.

A. Fasten the roof support to the roof using the screws provided. The roof support is optional. In this case the venting is to be adequately supported using either an alternate method suitable to the authority having jurisdiction or the optional roof support.

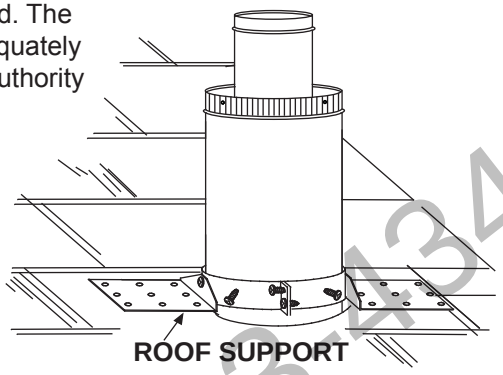

B. Stretch the inner flex pipe to the required length. Slip the inner flex pipe a minimum of 2” over the inner pipe of the air terminal connector and secure with 3 #8 screws. Seal using a heavy bead of high temperature sealant W573-0007 (not supplied).

C. Repeat using the outer flex pipe, using a heavy bead of high temperature sealant W573-0002 (not supplied).

D. Thread the air terminal connector / vent pipe assembly down through the roof. The air terminal must be positioned vertically and plumb. Attach the air terminal connector to the roof support, ensuring that the top of the air terminal is 16” above the highest point that it penetrates the roof.

E. Remove nails from the shingles, above and to the sides of the air terminal connector. Place the flashing over the air terminal connector leaving a min. 3/4” of the air terminal connector showing above the top of the flashing. Slide the flashing underneath the sides and upper edge of the shingles. Ensure that the air terminal connector is properly centred within the flashing, giving a 3/4” margin all around. Fasten to the roof. Do not nail through the lower portion of the flashing. Make weather-tight by sealing with caulking. Where possible, cover the sides and top edges of the flashing with roofing material.

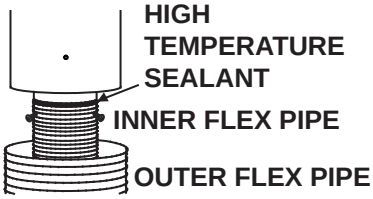

F. Aligning the seams of the terminal and air terminal connector, place the terminal over the air terminal connector making sure the vent pipe goes into the hole in the terminal. Secure with the three screws provided.

G. Apply a heavy bead of weatherproof caulking 2” above the flashing. Install the storm collar around the air terminal and slide down to the caulking. Tighten to ensure that a weather-tight seal between the air terminal and the collar is achieved.

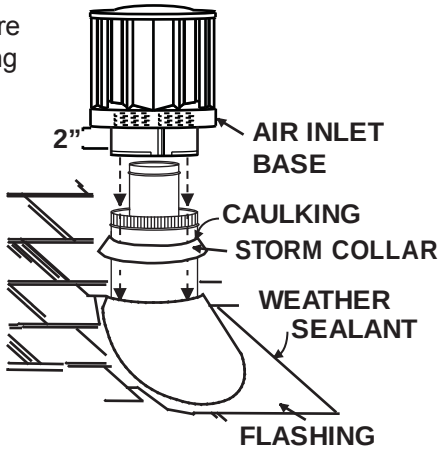

H. If more vent pipe needs to be used to reach the appliance see “HORIZONTAL AIR TERMINAL INSTALLATION” section.

24.1

CozyCabin.com 518-623-4349

4.2.5 APPLIANCE VENT CONNECTION

A. Attach the adjustable pipe to the last section of rigid pipe. Secure with screws and seal.

B. Install the inner flex pipe to the appliance. Secure with 3 screws and flat washers. Seal the joint and screw holes using the high temperature sealant W573-0007 (not supplied).

C. Run a bead of high temperature sealant (not supplied) around the inside of the air intake collar. Pull the adjustable pipe a minimum 2” into the air intake collar.

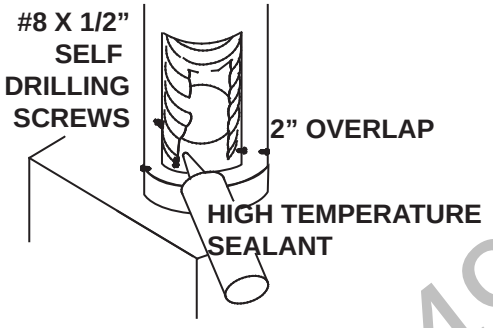

<u>NOTE:</u> Ensure that the sealant is not visible on the exterior pipes once installation is completed. An optional decorative black band is available for this use. In the event that the venting must be disassembled, care must be taken to reseal the venting.

28.3

CozyCabin.com 518-623-4349

4.2.6 VERTICAL THROUGH EXISTING CHIMNEY

This appliance is designed to be attached to a 3" co-linear flexible vent system running the full length of a masonry chimney.

The flexible vent pipe accommodates any contours of a masonry chimney, however, it is necessary to keep the flexible vent pipe as straight as possible. The inlet air collar of the termination cap must be connected to the air intake pipe.

Use Simpson Duravent Chimney Liner Termination Kit - 923GK (Base plate and Co-Linear to Co-Axial Adaptor.

Follow manufacturers (Simpson Dura-Vent) installation instructions.

When installing the appliance to this system, Duravent vent components must be used. You must start with a Duravent adaptor, GDS924N, directly off the appliance. The GDS924N is only available at your local authorized dealer / distributor.

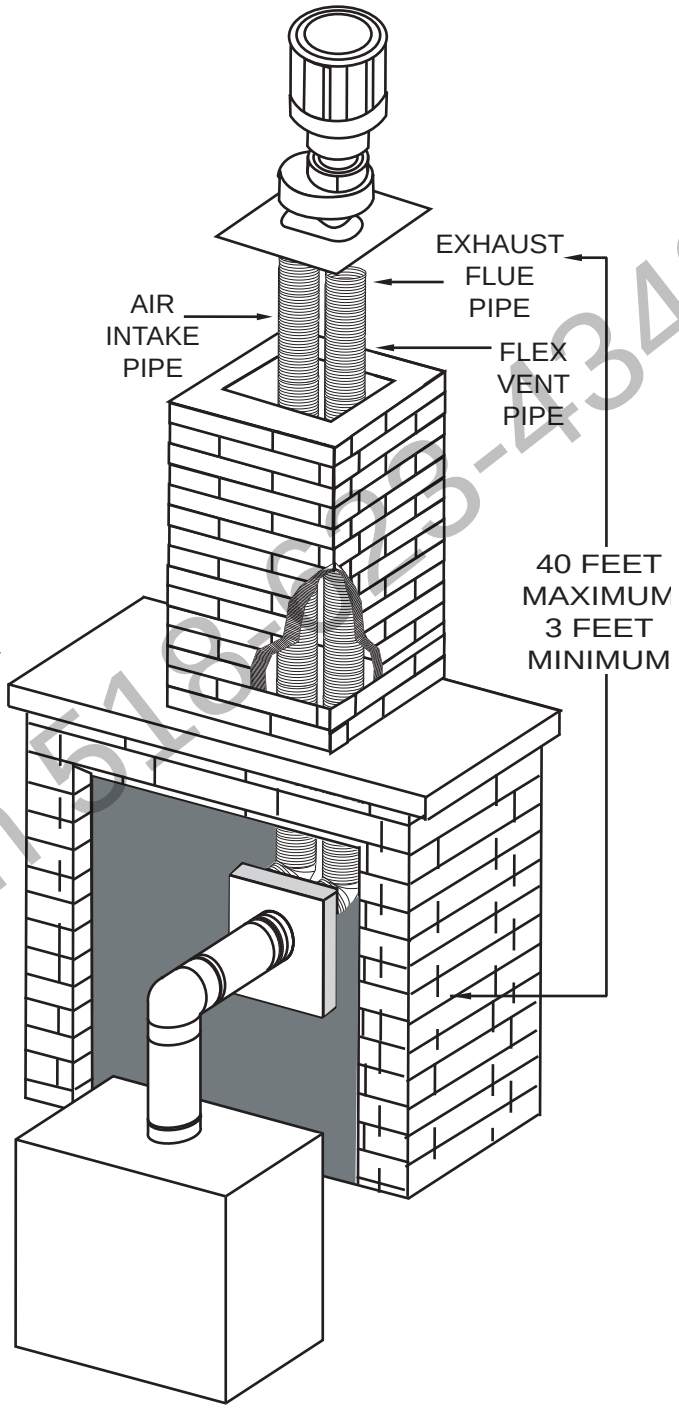

62.5

CozyCabin.com 518-622-4349

4.3 B-VENT INSTALLATION - GS50

4.3.1 CHIMNEY INSTALLATION

⚠ WARNING

A CHIMNEY VENTING THIS APPLIANCE SHALL NOT VENT ANY SOLID FUEL BURNING APPLIANCE.

Three types of chimney systems may be used with this appliance.

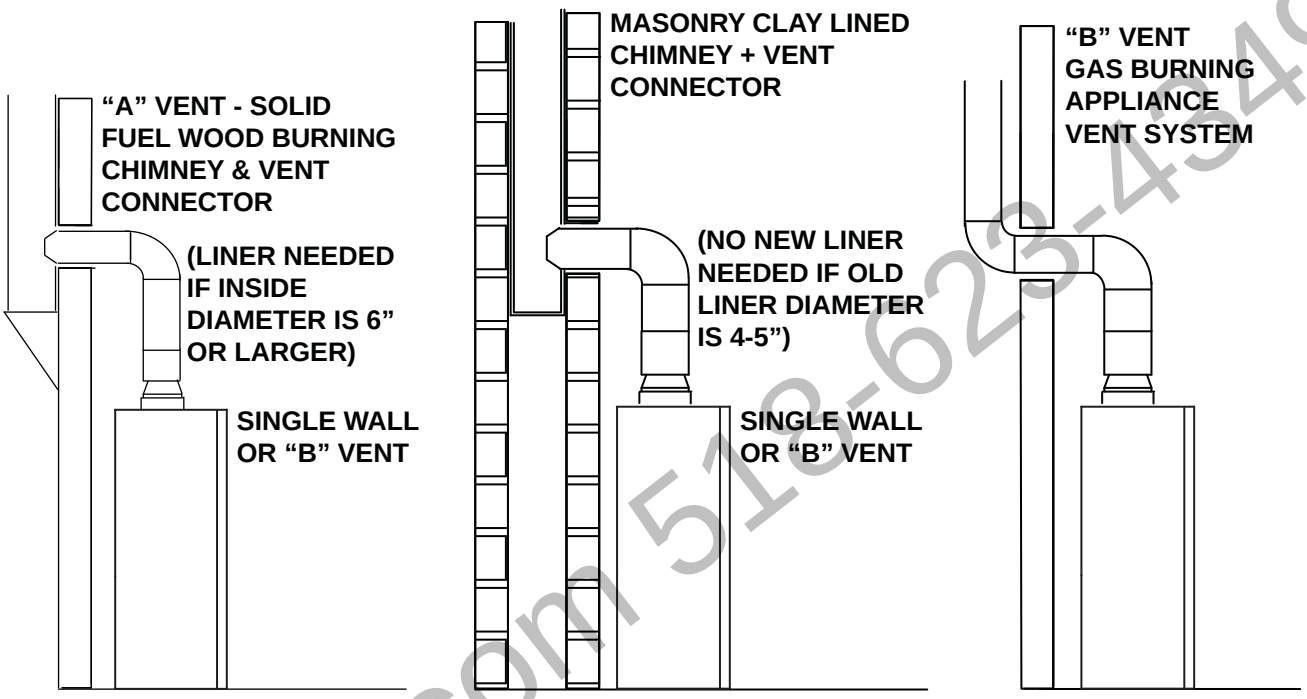

A chimney venting this appliance shall not vent any solid fuel burning appliance.
All horizontal runs must have a 1/4" rise per foot

63.7

4.3.2 INSTALLING FLASHING AND STORM COLLAR

Remove the nails from the shingles above and to the sides of the chimney. Place the flashing over the chimney pipe and slide underneath the sides and upper edge of the shingles. Ensure that the chimney pipe is properly centered within the flashing, giving a 3/4" margin all around. Fasten to the roof on the top and sides. DO NOT NAIL through the lower portion of the flashing. Make weather-tight by sealing with caulking. Where possible, cover the sides and top edges of the flashing with roofing material. Apply waterproof caulking, provided with the flashing, around the chimney, 1" above the top of the flashing and push the storm collar down into the caulking. Insert a rain cap onto the top of the last chimney section.

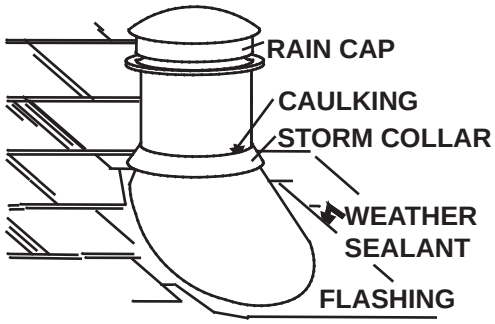

88.1

CozyCabin.com 518-623-4349

4.3.3 ADDING VENT SECTIONS

Add chimney sections, according to the manufacturers installation instructions. The chimney must extend at least, 3 feet above its point of contact with the roof and at least 2 feet higher than any wall, roof, building or obstacle within 10 feet horizontally.

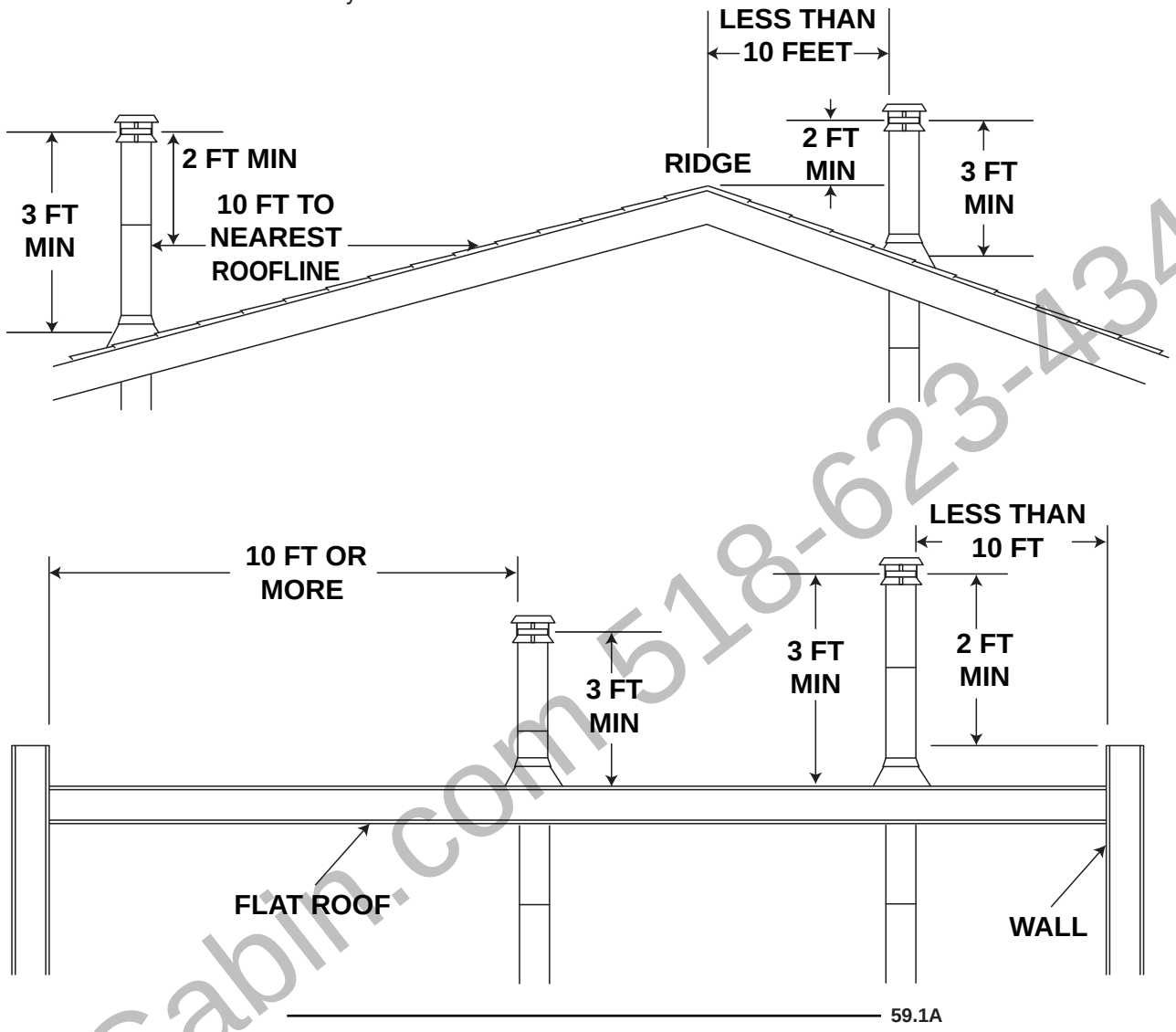

4.3.4 INSTALLING "B" VENT

ADAPTER INSTALLATION:

- Remove the spill switch bracket from the rear of the adapter.
- Gently pull the two wire terminals (located inside the 7" flue collar at the top of the appliance) out approximately 8".
- Bring the wires through the lower hole in the adapter and out the spill switch opening. To pass the wires through the hole more easily, temporarily take the two terminals together.
- With the spill switch opening aligned to the back of the appliance, take hold of the adaptor base and push the crimped edge into the appliance flue collar.
- Connect the wire terminals to the spill switch and re secure the bracket.

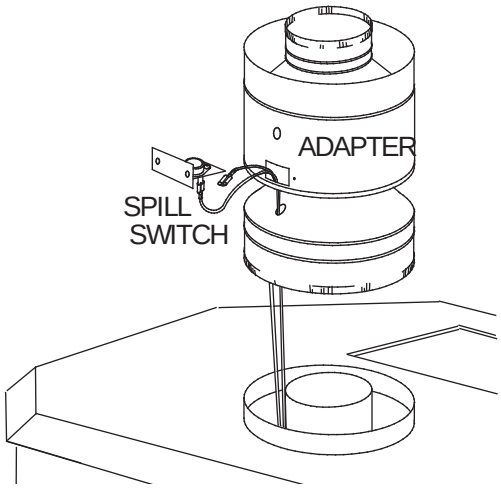

For aesthetics, the adaptor has been designed to accept a standard matte black 7" appliance pipe and a decorative black band (standard with the GS150KT). Both are available from your local authorized dealer / distributor.

CozyCabin.com 518-623-4349

4.3.5 "B" VENT ADAPTATIONS

Refer to "DOOR OPENING AND CLOSING" section prior to proceeding to prevent damaging the appliance.

A. Remove both burners and the log support bracket.

B. Remove the combustion air cover plate and its gasket. **THE TWO SCREWS MUST BE RE-SECURED.**

C. Undo the bracket holding the thermodisc, turn 90° as shown and reattach to the weld stud located on the right air manifold side.

NOTE: Do not tighten the wing nut until burner is installed; then ensure that the thermodisc firmly touches the underside of the burner tray and tighten. This enables the blower to function properly.

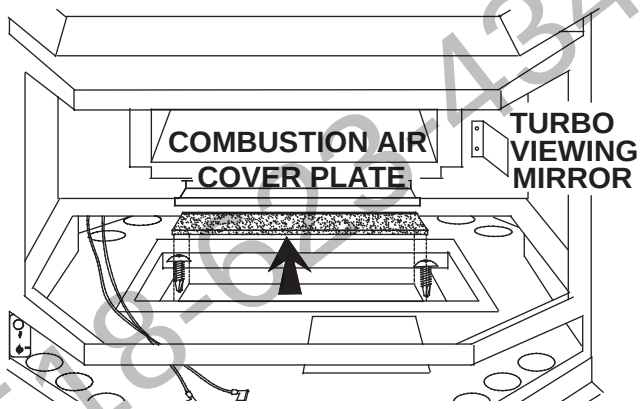

D. Secure the terminal block into place as shown with the screw supplied.

E. Gently pull the two white spill switch wires to take up any slack. Feed these wires down through the combustion air opening and back up through the 4x6 inch cut-out in the base. Connect the shorter of the 2 wires to the terminal block.

F. Attach the black on/off switch wire with the 3/16" tab to the other side of the terminal block. Connect the remaining wires (1 black - 1 white) with 1/4" connectors to TP/TH and TH on the gas valve.

G. Replace and re-secure the log support bracket and the two burners ensuring that each venturi fits over the burner orifice.

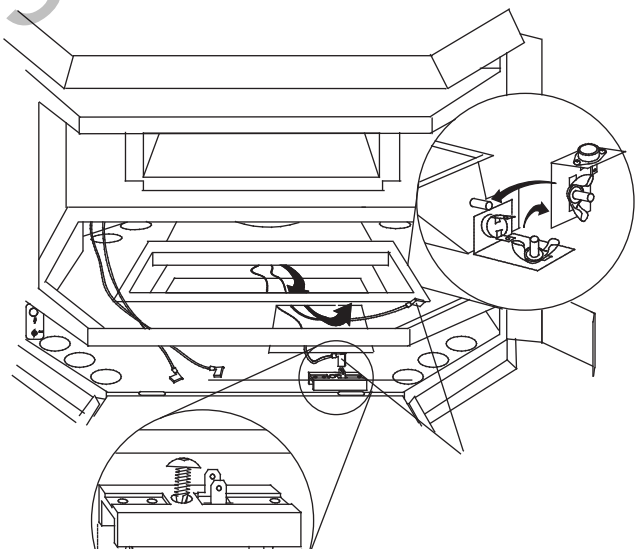

4.3.6 COMBUSTION AIR

⚠ WARNING

ANY APPLIANCE NEEDS AIR FOR SAFE OPERATION AND MUST BE INSTALLED IN SUCH A WAY THAT ADEQUATE COMBUSTION AIR IS AVAILABLE. THIS APPLIANCE IS DESIGNED TO FUNCTION USING EITHER OUTSIDE OR INSIDE (ROOM) AIR.

If using outside air, connections can be made through a hole in the floor to line up with the hole in the pedestal base. Use a fresh air kit available through your local authorized dealer / distributor. Secure the 4" diameter aluminum liner to the hole in the base of the pedestal. Avoid cutting away floor joist, electrical wiring or plumbing. Seal around the outside pipe with insulation to prevent drafts.

CozyCabin.com 518-623-4349

4.4 GAS INSTALLATION

⚠ WARNING
RISK OF FIRE, EXPLOSION OR ASPHYXIATION. ENSURE THERE ARE NO IGNITION SOURCES SUCH AS SPARKS OR OPEN FLAMES.
SUPPORT GAS CONTROL WHEN ATTACHING GAS SUPPLY PIPE TO PREVENT DAMAGING GAS LINE.
ALWAYS LIGHT THE PILOT WHETHER FOR THE FIRST TIME OR IF THE GAS SUPPLY HAS RUN OUT WITH THE GLASS DOOR OPENED OR REMOVED. PURGING OF THE GAS SUPPLY LINE SHOULD BE PERFORMED BY A QUALIFIED SERVICE TECHNICIAN. ASSURE THAT A CONTINUOUS GAS FLOW IS AT THE BURNER BEFORE CLOSING THE DOOR. ENSURE ADEQUATE VENTILATION. FOR GAS AND ELECTRICAL LOCATIONS, SEE "DIMENSION" SECTION.
ALL GAS CONNECTIONS MUST BE CONTAINED WITHIN THE APPLIANCE WHEN COMPLETE.
HIGH PRESSURE WILL DAMAGE VALVE. DISCONNECT GAS SUPPLY PIPING BEFORE TESTING GAS LINE AT TEST PRESSURES ABOVE 1/2 PSIG.
VALVE SETTINGS HAVE BEEN FACTORY SET, DO NOT CHANGE.

Installation and servicing to be done by a qualified installer. **Do not use open flame.**

A. Move the appliance into position and secure.

B. If equipped with a flex connector the appliance is designed to accept a 1/2" gas supply. Without the connector it is designed to accept a 3/8" gas supply. The appliance is equipped with a manual shut off valve to turn off the gas supply to the appliance.

C. Connect the gas supply in accordance to local codes. In the absence of local codes, install to the current CAN/CSA-B149.1 Installation Code in Canada or to the current National Fuel Gas Code, ANSI Z223.1 / NFPA 54 in the United States.

D. When flexing any gas line, support the gas valve so that the lines are not bent or kinked.

E. The gas line flex-connector should be installed to provide sufficient movement for shifting the burner assembly on it's side to aid with servicing components.

F. Check for gas leaks by brushing on a soap and water solution.

30.1A

4.4.1 B-VENT - MODEL GS50

Attach one lead from the spill switch (white wire) to terminal #3 located on the gas valve and the other (black) on/off switch lead to valve terminal #1.

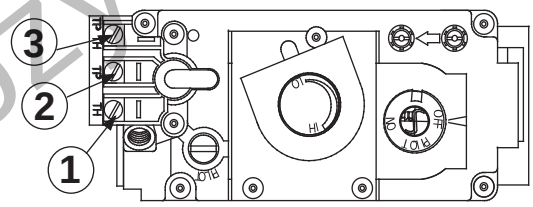

ATTACH THIS LABEL IN THE CONTROL AREA OF THE FIREPLACE.
THIS FIREPLACE HAS BEEN CONVERTED TO A 'B'VENT MODEL.

ATTACHEZ CET ETIQUETTE DANS LA REGION DE CONTROLE DU FOYER.
CE FOYER A ETE CONVERTI A UN MODELE A SYSTEME D'EVACUATION 'B'.
WS-385-160

Attach the B-Vent label, as illustrated, in the control area of the appliance.

CozyCabin.com 518-623-4349

4.5 WALL SWITCH / THERMOSTAT INSTALLATION

For ease of accessibility, an optional remove wall switch or millivolt thermostat may be installed in a convenient location. Route 2 strand solid core millivolt wire from the gas appliance to the wall switch/millivolt thermostat. The recommended maximum lead length depends on the wire size:

WIRE SIZE	MAX. LENGTH
14 gauge	100 feet
16 gauge	60 feet
18 gauge	40 feet

GDS50: Disconnect the existing wires from terminals 1 and 3 (from the on/off switch) and replace with the leads from the wall switch/millivolt thermostat / remote receiver.

GS50: Disconnect the existing on/off switch wire from terminal 1 on the valve and the black switch wire from the terminal block. Replace each connection using the wires from the wall switch/millivolt thermostat.

4.6 MOBILE HOME INSTALLATION

In Canada, mobile home installation may be vented horizontally or vertically. In the United States, it may only be installed vertically, see "VERTICAL VENTING" or "HORIZONTAL AIR TERMINAL INSTALLATION" section for installation.

The appliance is equipped with two 5/16" diameter holes located near each corner of the base. For mobile home installations, the appliance must be fastened in place. Use #10 screws, inserted through the holes in the base to secure. It is recommended that the appliance be secured in all installations.

5.0 FINISHING

5.1 DOOR OPENING AND CLOSING

When opening the fire viewing door, a simple procedure must be followed in order to not damage the door. First open the valve control door. Next open both side doors fully. Pull the latch handles towards you and release each catch. The door may now be safely opened. To close the door, repeat in reverse order.

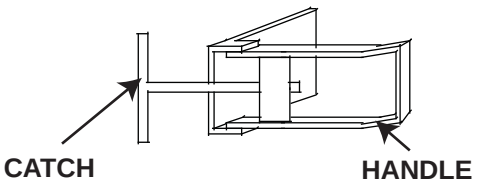

There may be instances that require adjustment of the door latches to ensure a tighter seal. To do this simply loosen and tighten each catch until both latches snap closed when securing the door.

CozyCabin.com 518-623-4349

5.2 LOG PLACEMENT

⚠ WARNING

FAILURE TO POSITION THE LOGS IN ACCORDANCE WITH THESE DIAGRAMS OR FAILURE TO USE ONLY LOGS SPECIFICALLY APPROVED WITH THIS APPLIANCE MAY RESULT IN PROPERTY DAMAGE OR PERSONAL INJURY.

LOGS MUST BE PLACED IN THEIR EXACT LOCATION IN THE APPLIANCE. DO NOT MODIFY THE PROPER LOG POSITIONS, SINCE APPLIANCE MAY NOT FUNCTION PROPERLY AND DELAYED IGNITION MAY OCCUR.

THE LOGS ARE FRAGILE AND SHOULD BE HANDLED WITH CARE.

76.1A

A. Place the 2 piece charcoal ember strip along the edge of the firebox

B. Place the base log #1 between the log supports, ensuring that it is pushed back against the back of the supports.

C. Align the square peg on log #2 with the notch on the base log..

D. Align the square pegs on log #3 with the notches on the right end of the base log.

E. Finally, align the square peg on log #4 with the notch on the left end of the base log.

CozyCabin.com 519-2-4349

5.3 LOGO PLACEMENT

Remove the backing of the logo supplied and centre over the logo installation holes, as indicated.

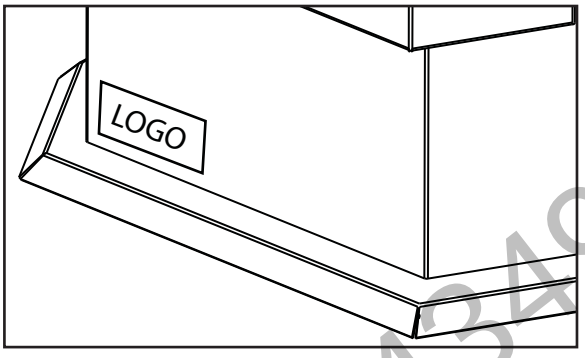

5.4 TRIVET INSTALLATION

Insert the trivet into the space on the appliance top. Line up the holes in the brackets, and secure using the screw provided.

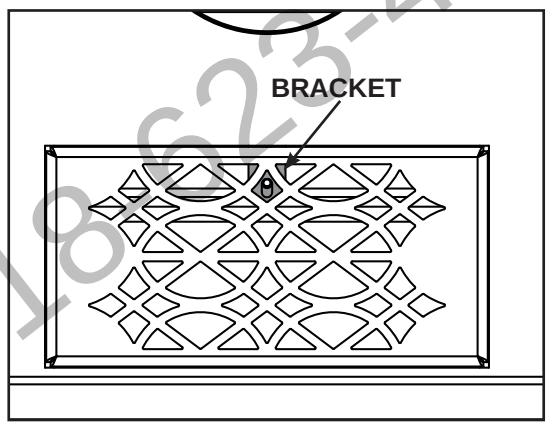

CozyCabin.com 518-623-4349

6.0 OPERATION

⚠ WARNING

IF YOU DO NOT FOLLOW THESE INSTRUCTIONS EXACTLY, A FIRE OR EXPLOSION MAY RESULT CAUSING PROPERTY DAMAGE, PERSONAL INJURY OR LOSS OF LIFE.

ALWAYS LIGHT THE PILOT WHETHER FOR THE FIRST TIME OR IF THE GAS SUPPLY HAS RUN OUT WITH THE GLASS DOOR OPENED OR REMOVED.

Ensure that a continuous gas flow is at the burner before installing the door. When lit for the first time, the appliance will emit an odor for a few hours. This is a normal temporary condition caused by the "burn-in" of paints and lubricants used in the manufacturing process and will not occur again.
After extended periods of non-operation such as following a vacation or a warm weather season, the appliance may emit a slight odor for a few hours. This is caused by dust particles in the heat exchanger burning off. In both cases, open a window to sufficiently ventilate the room.

FOR YOUR SAFETY READ BEFORE LIGHTING:

A. This appliance is equipped with a pilot which must be lit by hand while following these instructions exactly.
B. Before operating smell all around the appliance area for gas and next to the floor because some gas is heavier than air and will settle on the floor.
C. Use only your hand to turn the gas control knob. Never use tools. If the knob will not turn by hand, do not try to repair it. Call a qualified service technician. Force or attempted repair may result in a fire or explosion.
D. Do not use this appliance if any part has been under water. Immediately call a qualified service technician to inspect the appliance and replace any part of the control system and any gas control which has been under water.

WHAT TO DO IF YOU SMELL GAS:

- Turn off all gas to the appliance.
- Open windows.
- Do not try to light any appliance.
- Do not touch any electric switch; do not use any phone in your building.
- Immediately call your gas supplier from a neighbor's phone. Follow the gas supplier's instructions.
- If you cannot reach your gas supplier, call the fire department.

GAS KNOB

LIGHTING INSTRUCTIONS:

WARNING: The gas valve has an interlock device which will not allow the pilot burner to be lit until the thermocouple has cooled. Allow approximately 60 seconds for the thermocouple to cool.
When lighting and re-lighting, the gas knob cannot be turned from pilot to off unless the knob is depressed slightly.

1. Stop! Read the above safety information on this label.
2. Turn off all electric power to the appliance.
3. Turn the gas knob clockwise ↷ to off.
4. Wait five (5) minutes to clear out any gas. If you smell gas including near the floor. Stop! Follow "B" in the above safety information on this label. If you don't smell gas go the next step.
5. Turn gas knob counter-clockwise ↶ to pilot.
6. Depress slightly and hold gas knob while lighting the pilot with the push button igniter. Keep knob depressed for one minute, then release. If pilot does not continue to burn, repeat steps 3 through 5.
7. With pilot lit, depress and turn gas knob counter-clockwise ↶ to on.
8. If equipped with remote on-off switch / thermostat, main burner may not come on when you turn valve to on. Remote switch must be in the on position to ignite burner.
9. Turn on all electric power to the appliance.

TO TURN OFF GAS

1. Turn off all electric power to the appliance if service is to be performed.
2. Push in gas control knob slightly and turn clockwise ↷ to off. Do not force.

TURN THE CONTROL VALVE TO THE OFF POSITION WHEN HEATER IS NOT IN USE.

47.2

CozyCabin.com 518-623-4349

6.1 OPERATING INSTRUCTIONS

The on-off switch is located on the back of the appliance at the top left corner on models GDS50 and GS50.

6.2 TURBO BURNER OPERATION

The purpose of the turbo burner is to increase heat output of BTUs of the appliance and will only operate when the main burner is functioning. To turn the turbo burner on, simply depress the burner control knob (located in the valve compartment at the left hand side below the piezo ignitor) and rotate the knob counter-clockwise to 'high'.
The turbo burner flame can be observed on the reflective surface in the back right corner of the firebox.
The burner flame height may now be adjusted to achieve the heat output required. Because the flame is very efficient it will burn a very blue, almost transparent colour.
To turn off the burner, rotate the control knob clockwise to 'high'; depress the knob and turn it to off.

6.3 SPILL SWITCH - GS50 ONLY

This is a thermally activated switch, attached to the back of the chimney adapter, which senses the change in temperature and shuts down the gas valve in the event of a severe downdraft of air or a blocked or disconnected vent. It acts as a safety shut-off to prevent a build up of carbon monoxide or an explosion of unburnt gases during start up. If the flue is blocked or has no 'draw', the spill switch will automatically shut off the supply of gas within about 5-10 minutes.
TAMPERING WITH THE SWITCH CAN RESULT IN CARBON MONOXIDE (CO) POISONING AND POSSIBLE DEATH.

VENTING ACTION CHECK: A check for correct venting action must be made before the installed appliance is left with the customer. Test in the following manner.

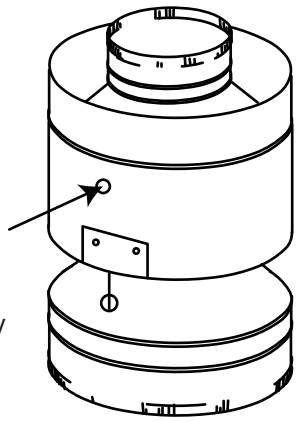

- Close all doors and windows in the room / start exhaust fans in the home / turn appliance blower off (if equipped).
- Set controls to 'high' and light the appliance.
- Wait 5 minutes. Light a match and extend it 1" into the hole located above the spill switch bracket on the adapter.
- Venting action is satisfactory if the flame stays lit. Venting action is unsatisfactory if the flame extinguishes.
- If venting action is unsatisfactory, turn the appliance off, wait 10 minutes and try again. If the match does not stay lit, turn the appliance off and check for vent blockage or restriction. If necessary, consult with a qualified inspector.

CozyCabin.com 518-623-4349

7.0 ADJUSTMENTS

7.1 PILOT BURNER ADJUSTMENT

Adjust the pilot screw to provide properly sized flame. Turn in a clockwise direction to reduce the gas flow.

Inlet pressure can be checked by turning screw (A) counter-clockwise until loosened and then placing pressure gauge tubing over the test point. Gauge should read 7” (minimum 4.5”) water column for natural gas or 13” (11” minimum) water column for propane. Check that main burner is operating on “HI”.

Outlet pressure can be checked the same as above using screw (B). Gauge should read 3.5” water column for natural gas or 10” water column for propane. Check that main burner is operating on “HI”.

AFTER TAKING PRESSURE READINGS, TIGHTEN SCREWS FIRMLY TO SEAL. DO NOT OVER TORQUE. LEAK TEST.

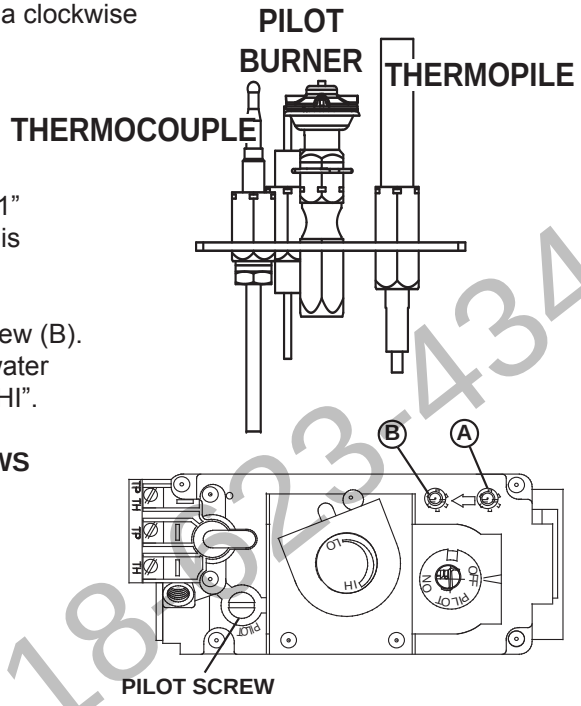

39.3

7.2 VENTURI ADJUSTMENT

This appliance has an air shutter that has been factory set open according to the chart below:

Regardless of venturi orientation, closing the air shutter will cause a more yellow flame, but can lead to carboning. Opening the air shutter will cause a more blue flame, but can cause flame lifting from the burner ports. The flame may not appear yellow immediately; allow 15 to 30 minutes for the final flame color to be established.

AIR SHUTTER ADJUSTMENT MUST ONLY BE DONE BY A QUALIFIED INSTALLER!

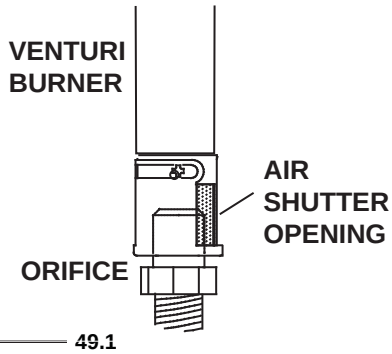

49.1

	FRONT BURNER	REAR BURNER
NG	1/4"	1/2"
LP	1/4"	1/2"

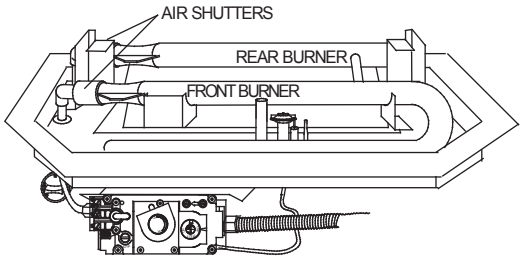

CozyCabin.com 518-623-4349

7.3 FLAME CHARACTERISTICS

It's important to periodically perform a visual check of the pilot and burner flames. Compare them to the illustrations provided. If any flames appear abnormal call a service person.

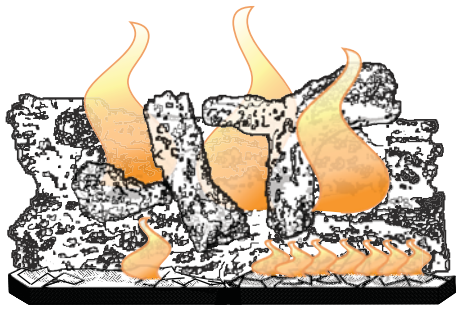

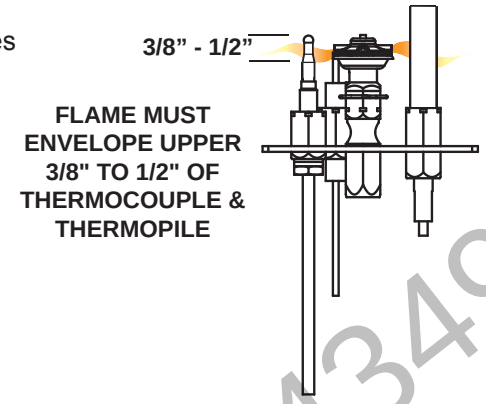

54.2

8.0 MAINTENANCE

⚠ WARNING

TURN OFF THE GAS AND ELECTRICAL POWER BEFORE SERVICING THE APPLIANCE.

APPLIANCE MAY BE HOT, DO NOT SERVICE UNTIL APPLIANCE HAS COOLED.

DO NOT USE ABRASIVE CLEANERS.

CAUTION: Label all wires prior to disconnection when servicing controls. Wiring errors can cause improper and dangerous operation. Verify proper operation after servicing. This appliance and its venting system should be inspected before use and at least annually by a qualified service person. The appliance area must be kept clear and free of combustible materials, gasoline or other flammable vapors and liquids. The flow of combustion and ventilation air must not be obstructed.

1. In order to properly clean the burner and pilot assembly, remove the logs, rocks and/or glass to expose both assemblies.
2. Keep the control compartment, media, burner, air shutter opening and the area surrounding the logs clean by vacuuming or brushing, at least once a year.
3. Check to see that all burner ports are burning. Clean out any of the ports which may not be burning or are not burning properly.
4. Check to see that the pilot flame is large enough to engulf the flame sensor and/or thermocouple / thermopile as well as reaches the burner.
5. Replace the cleaned logs, rocks or glass. Failure to properly position the media may cause carboning which can be distributed in the surrounding living area.
6. Check to see that the main burner ignites completely on all openings when turned on. A 5 to 10 second total light-up period is satisfactory. If ignition takes longer, consult your local authorized dealer / distributor.
7. Check that the gasketing on the sides, top and bottom of the door is not broken or missing. Replace if necessary.
8. If for any reason the vent air intake system is disassembled, re-install and re-seal per the instructions provided for the initial installation.

40.1

Due to the high temperature that the hinges experience, wet lubricants such as oil and WD40 will cause the hinges to seize and are therefore not suitable. Lubricate with a high temperature dry graphite, only.

Cozycabin.com 518-623-4349

8.1 REPLACEMENT BLOWER INSTALLATION

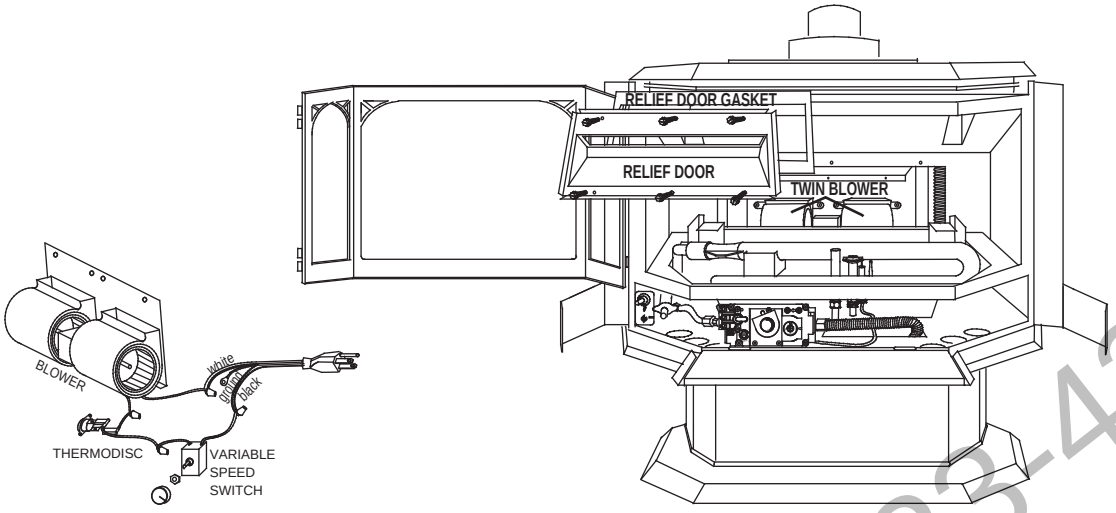

A. Turn off the electrical power and the gas supply to the appliance.

B. Open the lower louvre control door, the two side doors and the fire viewing door. Remove the logs.

C. Remove the relief door assembly held on with 6 screws. Discard the gasket.

D. Disconnect the two blower wires. Remove the blower bracket held on with 4 screws.

E. Replace the blower using the existing bracket. When connecting the replacement blower, tighten the screws without distorting the rubber grommets. Replace the bracket / blower assembly in the appliance.

F. Reconnect the two wires. Hold the replacement gasket in place and reattach the relief door assembly. Replace the logs. Close all doors.

G. Turn the gas supply and electricity back on.

Because the blower is thermally activated, when turned on, it will automatically start approximately 15-30 minutes after lighting the appliance and will run for approximately 30-45 minutes after the appliance has been turned off. Use of the fan increases the output of heat.

Drywall dust will penetrate into the blower bearings causing irreparable damage and must be prevented from coming into contact with the blower or its compartment. Any damage resulting from this condition is not covered by the warranty policy.

CozyCabin.com 518-623-4349

8.2 CARE OF GLASS

DO NOT CLEAN GLASS WHEN HOT! DO NOT USE ABRASIVE CLEANERS TO CLEAN GLASS.

Buff lightly with a clean dry soft cloth. Clean both sides of the glass after the first 10 hours of operation with a recommended fireplace glass cleaner. Thereafter clean as required. If the glass is not kept clean permanent discoloration and / or blemishes may result.

5.1

8.3 CARE OF PLATED PARTS

If the appliance is equipped with plated parts, you must clean fingerprints or other marks from the plated surfaces before operating the appliance for the first time. Use a glass cleaner or vinegar and towel to clean. If not cleaned properly before operating for the first time, the marks can cause permanent blemishes on the plating. After the plating is cured, the fingerprints and oils will not affect the finish and little maintenance is required, just wipe clean as needed. Prolonged high temperature burning with the door ajar may cause discolouration on plated parts.

<u>NOTE:</u> The protective wrap on plated parts is best removed when the assembly is at room temperature but this can be improved if the assembly is warmed, using a hair dryer or similar heat source.

6.1

CozyCabin.com 518-623-4349

9.0 REPLACEMENTS

⚠ WARNING

FAILURE TO POSITION THE PARTS IN ACCORDANCE WITH THIS MANUAL OR FAILURE TO USE ONLY PARTS SPECIFICALLY APPROVED WITH THIS APPLIANCE MAY RESULT IN PROPERTY DAMAGE OR PERSONAL INJURY.

**** THIS IS A FAST ACTING THERMOCOUPLE. IT IS AN INTEGRAL SAFETY COMPONENT. REPLACE ONLY WITH A FAST ACTING THERMOCOUPLE SUPPLIED BY WOLF STEEL LTD.**

Contact your dealer or the factory for questions concerning prices and policies on replacement parts. Normally all parts can be ordered through your Authorized dealer / distributor.

FOR WARRANTY REPLACEMENT PARTS, A PHOTOCOPY OF THE ORIGINAL INVOICE WILL BE REQUIRED TO HONOUR THE CLAIM.

When ordering replacement parts always give the following information:

- Model & Serial Number of appliance
- Installation date of appliance
- Part number
- Description of part
- Finish

*** IDENTIFIES ITEMS WHICH ARE NOT ILLUSTRATED. FOR FURTHER INFORMATION, CONTACT YOUR AUTHORIZED DEALER.**

41.2

COMMON COMPONENTS		
REF NO.	**PART NO.**	**DESCRIPTION**
1	W725-0042	SIT VALVE - NG
1	W725-0043	SIT VALVE - LP
2	W100-0046	TURBO REAR BURNER
3	W100-0040	FRONT BURNER
4	W455-0037	#43 REAR BURNER ORIFICE - NG
4	W455-0034	#57 REAR BURNER ORIFICE - LP
4	W455-0043	#45 REAR BURNER ORIFICE - HiAlt NG
4	W455-0035	#59 REAR BURNER ORIFICE - HiAlt LP
5	W455-0045	#34 FRONT BURNER ORIFICE - NG
5	W455-0033	#53 FRONT BURNER ORIFICE - LP / HiAlt LP
5	W455-0044	#36 FRONT BURNER ORIFICE - HiAlt NG
6	W010-0800	PILOT ASSEMBLY - LP
6	W010-0801	PILOT ASSEMBLY - NG
7	W455-0068	PILOT INJECTOR - LP
7	W455-0070	PILOT INJECTOR - NG
8	W680-0005	THERMOCOUPLE **
9	W680-0004	THERMOPILE
10 *	W290-0029	PILOT GASKET
11	W380-0001	TURBO CONTROL KNOB
12 *	W010-0087	TURBO VALVE - NG
12 *	W010-0175	TURBO VALVE - LP
13	GS-530K	BLACK TRIVET
14	W357-0001	PIEZO IGNITOR
15	W715-0195	PEDESTAL TRIM
16	GL-642	LOG SET
17	W135-0194	BASE LOG
18	W135-0195	MIDDLE CROSSOVER LOG
19	W135-0196	RIGHT CROSSOVER LOG
20	W135-0197	LEFT CHUNK
21	W135-0027	CHARCOAL EMBER STRIP

Cozycabin.com 518-623-4349

COMMON COMPONENTS

REF NO.	PART NO.	DESCRIPTION
22 *	W290-0030	BURNER GASKET
23	W562-0022	GLASS GASKET
24 *	W385-0334	NAPOLEON LOGO
25	W300-0029	FRONT WINDOW GLASS
26	W030-0021	ACCENT BAR
27	W300-0028	SIDE WINDOW GLASS
28	GDS-63	BLOWER C/W GASKET
29	W225-0086G	DOOR (FRAME ONLY)
30	W010-0715G	GOLD DOOR COMPLETE
31 *	W290-0032	RELIEF HOUSING GASKET
32 *	W430-0002	MAGNETIC CLOSURE
33 *	W290-0031	AIR MANIFOLD GASKET
34	W390-0001	LATCH
35	W750-0009	ELECTRODE WIRE
36 *	W660-0009	ON/OFF SWITCH
37 *	W690-0002	THERMODISC
38 *	W434-0001	MIRROR

GDS50 COMPONENTS

REF NO.	PART NO.	DESCRIPTION
39	W500-0111	COMBUSTION AIR COVER PLATE
40 *	W290-0033	COMBUSTION AIR GASKET
41 *	W380-0002	VARIABLE SPEED SWITCH KNOB
42	KB-35	VARIABLE SPEED SWITCH

GS50 COMPONENTS

REF NO.	PART NO.	DESCRIPTION
43	GS-150KT	ADAPTER KIT
44 *	W660-0006	SPILL SWITCH
45	W060-0003	TERMINAL BLOCK
46	W025-0001	DECORATIVE BRASS BAND
41 *	W380-0002	VARIABLE SPEED SWITCH KNOB
42	KB-35	VARIABLE SPEED SWITCH

TERMINAL KITS

REF NO.	PART NO.	DESCRIPTION
	GD-175 WALL TERMINAL KIT	
47	BM6790	90° ELBOW - 7" DIAMETER
48	GD222	TERMINAL ASSEMBLY
49	BM67ADJ	30" TO 53" ADJUSTABLE PIPE - 7" DIAMETER
50	W010-1313	FIRESTOP SPACER
51 *	W585-0267	TOP VENT SHIELD
51 *	W020-0032	HARDWARE
52	BM3730	BLACK TRIM COLLAR
53	BM6724	24" STOVE PIPE - 7" DIAMETER
54 *	W010-0300	10' ALUMINUM FLEX LINER C/W SPACERS - 4" DIAMETER
55	W025-0003	DECORATIVE BLACK BAND

CozyCabin.com 518-623-4349

TERMINAL KITS

REF NO.	PART NO.	DESCRIPTION
	GD-180 PERISCOPE	
47	BM6790	90° ELBOW - 7" DIAMETER
56	GD201	PERISCOPE
49	BM67ADJ	30" TO 53" ADJUSTABLE PIPE - 7" DIAMETER
50	W010-1313	FIRESTOP SPACER
51 *	W585-0267	TOP VENT SHIELD
51 *	W020-0032	HARDWARE
52	BM3730	BLACK TRIM COLLAR
53	BM6724	24" STOVE PIPE - 7" DIAMETER
54 *	W010-0300	10' ALUMINUM FLEX LINER C/W SPACERS - 4" DIAMETER
55	W025-0003	DECORATIVE BLACK BAND

TERMINAL KITS

REF NO.	PART NO.	DESCRIPTION
	GD110 - 1/12 TO 7/12 PITCH	
57	W670-0006	AIR TERMINAL
58	W490-0073	4/7 INNER/OUTER SLEEVE
59	W010-0567	ROOF SUPPORT
60	W263-0054	ROOF FLASHING
61	W170-0063	STORM COLLAR
	GD111 - 8/12 TO 12/12 PITCH	
57	W670-0006	AIR TERMINAL
58	W490-0073	4/7 INNER/OUTER SLEEVE
59	W010-0567	ROOF SUPPORT
60	W236-0055	ROOF FLASHING
61	W170-0063	STORM COLLAR
	GD112 - FLAT ROOF	
57	W670-0006	AIR TERMINAL
58	W490-0073	4/7 INNER/OUTER SLEEVE
59	W010-0567	ROOF SUPPORT
60	W263-0056	ROOF FLASHING
61	W170-0063	STORM COLLAR

ACCESSORIES

REF NO.	PART NO.	DESCRIPTION
62 *	GS-530G	GOLD PLATED TRIVET
63 *	W690-0001	MILLIVOLT THERMOSTAT
64 *	W660-0011	REMOTE CONTROL - ADVANTAGE PLUS

GDS50 ACCESSORIES

REF NO.	PART NO.	DESCRIPTION
65 *	BM6745	45° ELBOW
66	GD301	HEAT GUARD
67 *	W175-0001	4" COUPLER
68 *	W573-0007	10.3 OZ TUBE HIGH TEMP SEALANT

CozyCabin.com 518-623-4349

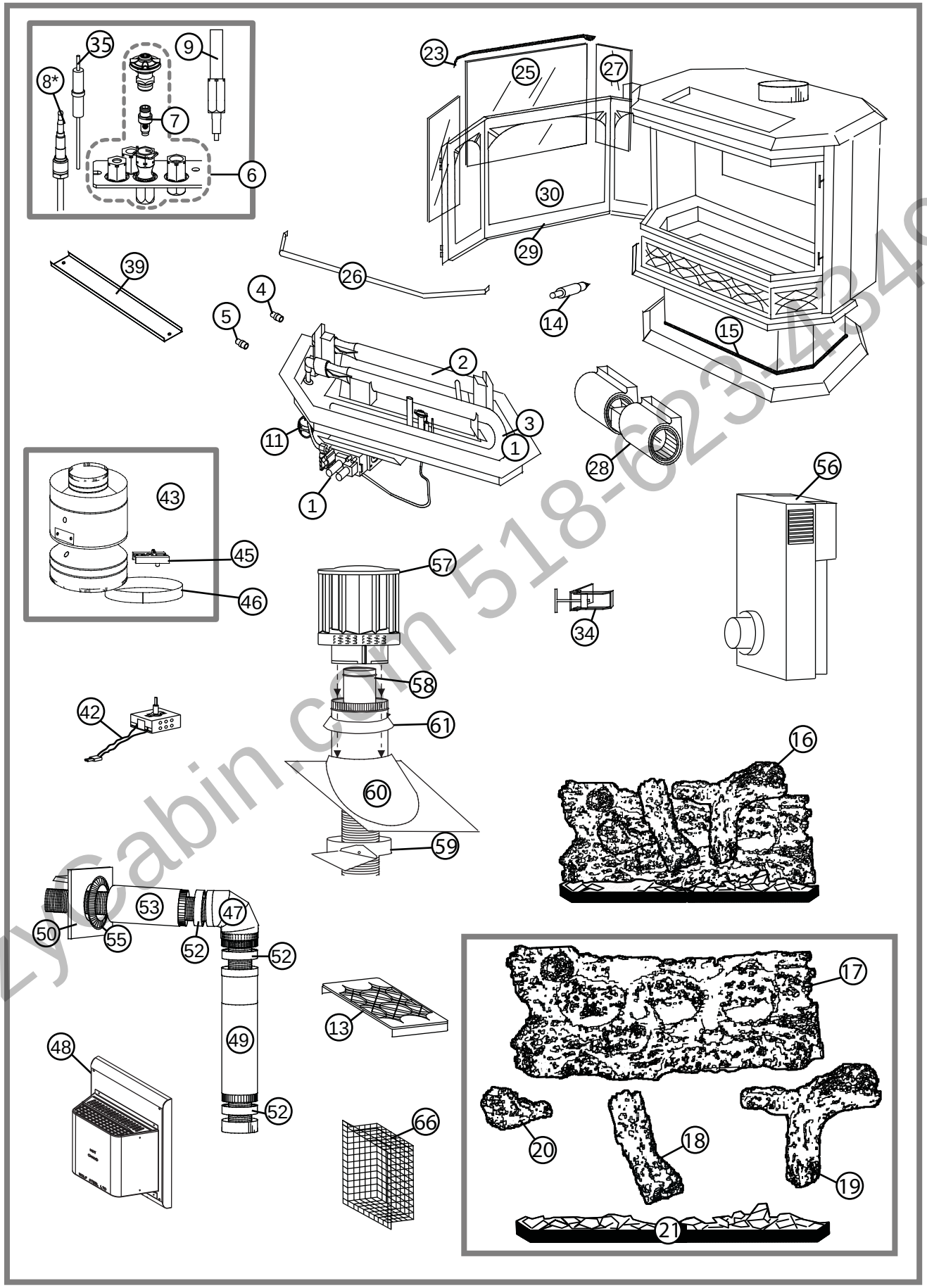

Cozy Cabin.com 518-623-4349

10.0 TROUBLE SHOOTING

⚠ WARNING

ALWAYS LIGHT THE PILOT WHETHER FOR THE FIRST TIME OR IF THE GAS SUPPLY HAS RAN OUT, WITH THE GLASS DOOR OPEN OR REMOVED.

TURN OFF THE GAS AND ELECTRICAL POWER BEFORE SERVICING THE APPLIANCE.

APPLIANCE MAY BE HOT, DO NOT SERVICE UNTIL APPLIANCE HAS COOLED.

DO NOT USE ABRASIVE CLEANERS.

SYMPTOM	PROBLEM	TEST SOLUTION
Main burner goes out; pilot stays on.	Pilot flame is not large enough or not engulfing the thermopile.	- Turn up the pilot flame. - Replace pilot assembly.
	Thermopile shorting.	- Clean thermopile connection to the valve. Reconnect. - Replace thermopile / valve.
	Remote wall switch wire is too long; too much resistance in the system.	- Shorten wire to correct length or wire gauge.
	Faulty thermostat or switch.	- Replace.
Main burner goes out; pilot goes out.	Refer to “MAIN BURNER GOES OUT; PILOT STAYS ON”	
	Vent is blocked	- Check for vent blockage.
	Vent is re-circulating	- Check joint seals and installation
	Flexible vent has become disconnected from appliance.	- Re-attach to appliance. - Cap was not replaced.
Pilot goes out when the gas knob is released. **The gas valve has an interlock device which will not allow the pilot burner to be lit until the thermocouple has cooled. Allow approximately 60 seconds for the thermocouple to cool.**	System is not correctly purged	- Purge the gas line.
	Out of propane gas.	- Fill the tank.
	Pilot flame is not large enough.	- Turn up the pilot flame.
	Pilot flame is not engulfing the thermocouple	- Gently twist the pilot head to improve the flame pattern around the thermocouple.
	Thermocouple shorting / faulty.	- Loosen and tighten thermocouple. - Clean thermocouple and valve connection. - Replace thermocouple. - Replace valve.
	Faulty valve.	- Replace.
Pilot burning; no gas to main burner; gas knob is on ‘HI’; wall switch / thermostat is on.	Thermostat or switch is defective	- Connect a jumper wire across the wall switch terminals; if main burner lights, replace switch / thermostat.
	Wall switch wiring is defective.	- Disconnect the switch wires & connect a jumper wire across terminals 1 & 3; if the main burner lights, check the wires for defects and/or replace wires.
	Main burner orifice is plugged.	- Remove stoppage in orifice.
	Faulty valve.	- Replace.
Pilot goes out while standing; Main burner is in ‘OFF’ position.	Gas piping is undersized.	- Turn on all gas appliances and see if pilot flame flutters, diminishes or extinguishes, especially when main burner ignites. Monitor appliance supply working pressure. - Check if supply piping size is to code. Correct all undersized piping.
Main burner flame is a blue, lazy, transparent flame.	Blockage in vent.	- Remove blockage. In really cold conditions, ice buildup may occur on the terminal and should be removed as required.
	Incorrect installation.	- Ensure correct location of storm collars.

CozyCabin.com 518-623-4349

SYMPTOM	PROBLEM	TEST SOLUTION
Pilot will not light. 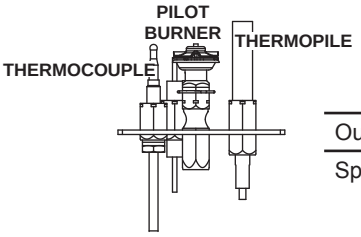	No spark at pilot burner.	- Check if pilot can be lit by a match. - Check that the wire is connected to the push button igniter. - Check if the push button igniter needs tightening. - Replace the wire if the wire insulation is broken or frayed. - Replace the electrode if the ceramic insulator is cracked or broken. - Replace the push button ignitor
	Out of propane gas.	- Fill the tank.
	Spark gap is incorrect.	- Spark gap should be 0.150” to 0.175” (5/32” to 11/64” approx.) from the electrode tip and the pilot burner. To ensure proper electrode location, tighten securing nut (finger tight plus 1/4 turn).
	No gas at the pilot burner.	- Check that the manual valve is turned on. - Check the pilot orifice for blockage. - Replace the valve. - Call the gas distributor.
Flames are consistently too large or too small. Carboning occurs. 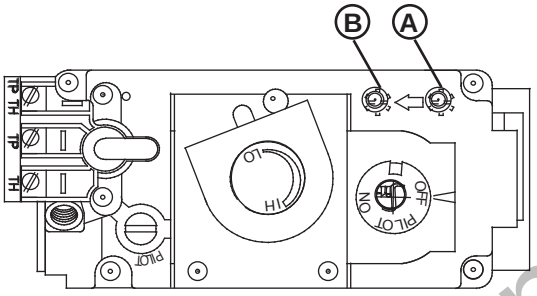	Unit is over-fired or underfired.	- Check pressure readings: - Inlet pressure can be checked by turning screw (A) counter-clockwise 2 or 3 turns and then placing pressure gauge tubing over the test point. Gauge should read 7” (minimum 4.5”) water column for natural gas or 13” (minimum 11”) water column for propane. Check with main burner is operating on ‘HI’. - Outlet pressure can be checked the same as above using screw (B). Gauge should read 3.5” water column for natural gas or 10” water column for propane. Check that main burner is operating on ‘HI’. - AFTER TAKING PRESSURE READINGS, BE SURE TO TURN SCREWS CLOCKWISE FIRMLY TO RESEAL. DO NOT OVER TORQUE. - Leak test with a soap and water solution.
Flames are very aggressive.	Door is ajar.	- Ensure the mechanical means of securing the door is providing a tight seal.
Carbon is being deposited on glass, logs or combustion chamber surfaces.	Air shutter has become blocked.	- Ensure air shutter opening is free of lint or other obstructions.
	Flame is impinging on the logs or combustion chamber.	- Check that the logs are correctly positioned. - Open air shutter to increase the primary air. - Check the input rate: check the manifold pressure and orifice size as specified by the rating plate values. - Check that the door gasketing is not broken or missing and that the seal is tight. - Check that both vent liners are free of holes and well sealed at all joints. - Check that minimum rise per foot has been adhered to for any horizontal venting.
White / grey film forms.	Sulphur from fuel is being deposited on glass, logs or combustion chamber surfaces.	- Clean the glass with a recommended gas appliance glass cleaner. - DO NOT CLEAN GLASS WHEN HOT. - If deposits are not cleaned off regularly, the glass may become permanently marked.
Exhaust fumes smelled in room, headaches.	Appliance is spilling.	- Ensure exhaust bracket gasket seal. - Check door seal and relief flap seal. - Check for chimney blockage. - Check that chimney is installed to building code. - Room is in negative pressure; increase fresh air supply. - Check cap gasket on the flue pipe assembly.
Remote wall switch is in ’OFF’ position; main burner comes on when gas knob is turned to ‘ON’ position.	Wall switch is mounted upside down.	- Reverse.
	Remote wall switch is grounding.	- Replace.
	Remote wall switch wire is grounding.	- Check for ground (short); repair ground or replace wire.
	Faulty valve.	- Replace.

CozyCabin.com 519-623-4349

SYMPTOM	PROBLEM	TEST SOLUTION
Blower does not turn on	Blower high limit switch has been activated	- Turn blower switch on, turn turbo rear burner off and front burner to low. When blower turns on, re-adjust burners.
Door sticking	Dirt / dust adheres to the hinges; is heated and burns causing sticking.	- Lift door from its hinges. Lubricate with high-temp dry graphite only. - **NOTE: Due to high temperatures that the hinges experience, wet lubricants such as oil and WD40 will cause the hinge to seize and are therefore not suitable.**

CozyCabin.com 518-623-4349

11.0 WARRANTY

NAPOLEON® products are manufactured under the strict Standard of the world recognized ISO 9001 : 2008 Quality Assurance Certificate.

NAPOLEON® products are designed with superior components and materials assembled by trained craftsmen who take great pride in their work. The burner and valve assembly are leak and test-fired at a quality test station. The complete appliance is again thoroughly inspected by a qualified technician before packaging to ensure that you, the customer, receives the quality product that you expect from NAPOLEON®.

NAPOLEON® GAS APPLIANCE PRESIDENT'S LIFETIME LIMITED WARRANTY

The following materials and workmanship in your new NAPOLEON® gas appliance are warranted against defects for as long as you own the appliance. This covers: combustion chamber, heat exchanger, stainless steel burner, phazer™ logs and embers, rocks, ceramic glass (thermal breakage only), gold plated parts against tarnishing, porcelainized enameled components and aluminum extrusion trims.*

Electrical (110V and millivolt) components and wearable parts such as blowers, gas valves, thermal switch, switches, wiring, remote controls, ignitor, gasketing, and pilot assembly are covered and NAPOLEON® will provide replacement parts free of charge during the first year of the limited warranty.*

Labour related to warranty repair is covered free of charge during the first year. Repair work, however, requires the prior approval of an authorized company official. Labour costs to the account of NAPOLEON® are based on a predetermined rate schedule and any repair work must be done through an authorized NAPOLEON® dealer.

* Construction of models vary. Warranty applies only to components included with your specific appliance.

CONDITIONS AND LIMITATIONS

NAPOLEON® warrants its products against manufacturing defects to the original purchaser only. Registering your warranty is not necessary. Simply provide your proof of purchase along with the model and serial number to make a warranty claim. NAPOLEON® reserves the right to have its representative inspect any product or part thereof prior to honouring any warranty claim. Provided that the purchase was made through an authorized NAPOLEON® dealer your appliance is subject to the following conditions and limitations:

Warranty coverage begins on the date of original installation.

This factory warranty is non-transferable and may not be extended whatsoever by any of our representatives.

The gas appliance must be installed by a licensed, authorized service technician or contractor. Installation must be done in accordance with the installation instructions included with the product and all local and national building and fire codes.

This limited warranty does not cover damages caused by misuse, lack of maintenance, accident, alterations, abuse or neglect and parts installed from other manufacturers will nullify this warranty.

This limited warranty further does not cover any scratches, dents, corrosion or discoloring caused by excessive heat, abrasive and chemical cleaners nor chipping on porcelain enamel parts, mechanical breakage of PHAZER™ logs and embers.

This warranty extends to the repair or replacement of warranted parts which are defective in material or workmanship provided that the product has been operated in accordance with the operation instructions and under normal conditions.

After the first year, with respect to this President's Lifetime Limited Warranty, NAPOLEON® may, at its discretion, fully discharge all obligations with respect to this warranty by refunding to the original warranted purchaser the wholesale price of any warranted but defective part(s).

NAPOLEON® will not be responsible for installation, labour or any other expenses related to the reinstallation of a warranted part and such expenses are not covered by this warranty.

Notwithstanding any provisions contained in the President's Lifetime Limited Warranty, NAPOLEON'S responsibility under this warranty is defined as above and it shall not in any event extend to any incidental, consequential or indirect damages.

This warranty defines the obligations and liability of NAPOLEON® with respect to the NAPOLEON® gas appliance and any other warranties expressed or implied with respect to this product, its components or accessories are excluded.

NAPOLEON® neither assumes, nor authorizes any third party to assume, on its behalf, any other liabilities with respect to the sale of this product.

NAPOLEON® will not be responsible for: over-firing, downdrafts, spillage caused by environmental conditions such as rooftops, buildings, nearby trees, hills, mountains, inadequate vents or ventilation, excessive venting configurations, insufficient makeup air, or negative air pressures which may or may not be caused by mechanical systems such as exhaust fans, furnaces, clothes dryers, etc.

Any damages to the appliance, combustion chamber, heat exchanger, plated trim or other components due to water, weather damage, long periods of dampness, condensation, damaging chemicals or cleaners will not be the responsibility of NAPOLEON®.

All parts replaced under the President's Limited Lifetime Warranty Policy are subject to a single claim.

During the first 10 years NAPOLEON® will replace or repair the defective parts covered by the lifetime warranty at our discretion free of charge. From 10 years to life, NAPOLEON® will provide replacement parts at 50% of the current retail price.

All parts replaced under the warranty will be covered for a period of 90 days from the date of their installation.

The manufacturer may require that defective parts or products be returned or that digital pictures be provided to support the claim. Returned products are to be shipped prepaid to the manufacturer for investigation. If a product is found to be defective, the manufacturer will repair or replace such defect.

Before shipping your appliance or defective components, your dealer must obtain an authorization number. Any merchandise shipped without authorization will be refused and returned to sender.

Shipping costs are not covered under this warranty.

Additional service fees may apply if you are seeking warranty service from a dealer.

Warranty labour allowance is only for the replacement of the warranted part. Travel, diagnostic tests, shipping and other related charges are not covered by this warranty.

ALL SPECIFICATIONS AND DESIGNS ARE SUBJECT TO CHANGE WITHOUT PRIOR NOTICE DUE TO ON-GOING PRODUCT IMPROVEMENTS. NAPOLEON® IS A REGISTERED TRADEMARK OF WOLF STEEL LTD. PATENTS U.S. 5.303.693.801 - CAN. 2.073.411, 2.082.915. © WOLF STEEL LTD.

2.1A

CozyCabin.com Fla 623-4349

12.0 SERVICE HISTORY

Appliance Service History

This heater must be serviced annually depending on usage.

Date	Dealer Name	Service Technician Name	Service Performed	Special Concerns

CozyCabin.com 518-623-4349

13.0 NOTES

CozyCabin.com 518-623-4349

44.1

CozyCabin.com 518-623-4349